HCD-G2BNiP/G2NiP

SERVICE MANUAL

Ver. 1.1 2012.03

AEP Model
HCD-G2BNiP/G2NiP
UK Model
Australian Model
HCD-G2BNiP

- HCD-G2BNiP is compact disc receiver in CMT-G2BNiP.
- HCD-G2NiP is compact disc receiver in CMT-G2NiP.

Photo: HCD-G2BNiP

Note:
Be sure to keep your PC used for service and checking of this unit always updated with the latest version of your anti-virus software.
In case a virus affected unit was found during service, contact your Service Headquarters.

Model Name Using Similar Mechanism	NEW
CD Mechanism Type	CDM77B-K6BD94DC
Base Unit Name	BU-K6BD94DC
Optical Pick-up Block Name	KSM-213DCP

SPECIFICATIONS

Amplifier section

European models:

Power output (rated):
40 watts + 40 watts (6 ohms at 1 kHz, 1% THD)

Continuous RMS power output (reference):
50 watts + 50 watts (6 ohms at 1 kHz, 10% THD)

Music power output (reference):
60 watts + 60 watts (6 ohms at 1 kHz, 10% THD)

Australian model:

Power output (rated):
40 watts + 40 watts (6 ohms at 1 kHz, 1% THD)

Continuous RMS power output (reference):
50 watts + 50 watts (6 ohms at 1 kHz, 10% THD)

Wireless LAN section

Compatible standards:
IEEE 802.11 b/g (WEP 64 bit, WEP 128 bit, WPA/WPA2-PSK (AES), WPA/WPA2-PSK (TKIP))

Radio frequency:
2.4 GHz

CD player section

System:
Compact disc and digital audio system

Laser Diode Properties
Emission Duration: Continuous
Laser Output*: Less than 44.6μW
* This output is the value measurement at a distance of 200mm from the objective lens surface on the Optical Pick-up Block with 7mm aperture.

Frequency response:
20 Hz – 20 kHz

Signal-to-noise ratio:
More than 90 dB

Dynamic range:
More than 90 dB

Tuner section

AM tuner section:

Tuning range:
European model:
531 kHz – 1,602 kHz (with 9 kHz tuning interval)
Other models:
530 kHz – 1,710 kHz (with 10 kHz tuning interval)
531 kHz – 1,710 kHz (with 9 kHz tuning interval)

Antenna:
AM loop antenna

Intermediate frequency:
400 kHz

FM tuner section:
FM stereo, FM superheterodyne tuner

Tuning range:
87.5 MHz – 108.0 MHz (50 kHz step)

Antenna:
FM lead antenna

Antenna terminals:
75 ohms unbalanced

Intermediate frequency:
200 kHz, 250 kHz, 300 kHz, 350 kHz, 400 kHz

DAB/DAB+ tuner section (HCD-G2BNiP only):

FM stereo, DAB/FM superheterodyne tuner

Frequency range
Band-III:
174.928 (5A) MHz – 239.200 (13F) MHz

Antenna:
DAB/FM lead antenna

DAB/DAB+ frequency table (Band-III)

Frequency	Label
174.928 MHz	5A
176.640 MHz	5B
178.352 MHz	5C
180.064 MHz	5D
181.936 MHz	6A
183.648 MHz	6B
185.360 MHz	6C
187.072 MHz	6D
188.928 MHz	7A
190.640 MHz	7B
192.352 MHz	7C
194.064 MHz	7D
195.936 MHz	8A
197.648 MHz	8B
199.360 MHz	8C
201.072 MHz	8D
202.928 MHz	9A
204.640 MHz	9B
206.352 MHz	9C
208.064 MHz	9D
209.936 MHz	10A
211.648 MHz	10B
213.360 MHz	10C
215.072 MHz	10D
216.928 MHz	11A
218.640 MHz	11B
220.352 MHz	11C
222.064 MHz	11D
223.936 MHz	12A
225.648 MHz	12B
227.360 MHz	12C
229.072 MHz	12D
230.784 MHz	13A
232.496 MHz	13B
234.208 MHz	13C
235.776 MHz	13D
237.488 MHz	13E
239.200 MHz	13F

iPod/iPhone section

Compatible iPod/iPhone models:

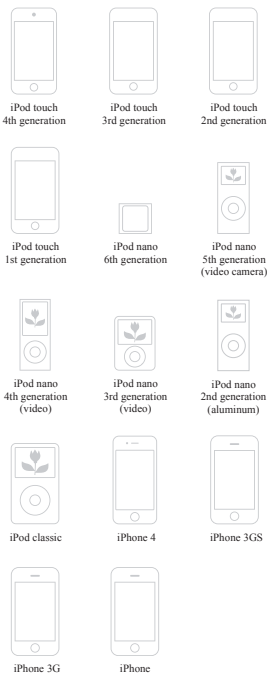

USB section

Supported bit rate:
MP3 (MPEG 1 Audio Layer-3): 32 kbps – 320 kbps, VBR
WMA: 48 kbps – 192 kbps, VBR
AAC: 48 kbps – 320 kbps

Sampling frequencies:
MP3 (MPEG 1 Audio Layer-3): 32/44.1/48 kHz
WMA: 44.1 kHz
AAC: 44.1 kHz

Inputs/Outputs

FM Antenna terminals:
75 ohms unbalanced

DAB/DAB+ Antenna terminal:
75 ohms, F female

AUDIO IN (RCA):
Sensitivity 700 mV, impedance 47 kilohms

SPEAKERS:
Accepts impedance of 6 ohms – 16 ohms

(USB) port:
Type A, maximum current 1 A

NETWORK port:
10BASE-T/100BASE-TX

General

Power requirements:
European models:
AC 230 V – 230 V, 50/60Hz
Australian model:
AC 230 V – 240 V, 50/60 Hz

Power consumption:
50 watts

Dimensions (W/H/D) (excl. speakers):
Approx. 220 mm × 141 mm × 335 mm

Mass (excl. speakers):
Approx. 5.6 kg

Design and specifications are subject to change without notice.

- Standby power consumption: 0.5 W

COMPACT DISC RECEIVER

9-893-336-02
2012C33-1

© 2012.03

Sony Corporation
Published by Sony Techno Create Corporation

SONY®

TABLE OF CONTENTS

1. SERVICING NOTES 3

2. DISASSEMBLY
2-1. Disassembly Flow 10
2-2. Case Block 11
2-3. Wireless LAN Module (MOD1) 11
2-4. Panel (CD Tray) 12
2-5. Panel (Front) Block 13
2-6. Panel (Rear) Block 14
2-7. MAIN Board 15
2-8. NET Board 16
2-9. Holder (CD Front) Block 16
2-10. AMP Board Block 17
2-11. AMP Board 18
2-12. Power Transformer (T901) 19
2-13. CD Mechanism Deck Block (CDM77B-K6BD94DC) 20
2-14. Belt 20
2-15. Base Unit (BU-K6BD94DC) 21
2-16. Optical Pick-up Block (KSM-213DCP) 21
2-17. Holder (CD) Block 22
2-18. DCDC Board 22

3. TEST MODE 23

4. ELECTRICAL CHECK 24

5. DIAGRAMS
5-1. Block Diagram - CD/USB/PANEL Section - 25
5-2. Block Diagram - TUNER/NETWORK Section - 26
5-3. Block Diagram - AMP Section - 27
5-4. Block Diagram - POWER SUPPLY Section - 28
5-5. Printed Wiring Board - BD94DC Board - 30
5-6. Schematic Diagram - BD94DC Board - 31
5-7. Printed Wiring Board - TUNER Board - 32
5-8. Schematic Diagram - TUNER Board - 32
5-9. Printed Wiring Board - DAB Board (G2BNiP) - 33
5-10. Schematic Diagram - DAB Board (G2BNiP) - 33
5-11. Printed Wiring Boards - NETWORK Section - 34
5-12. Schematic Diagram - NETWORK Section - 35
5-13. Printed Wiring Board - MAIN Board (Side A) - 36
5-14. Printed Wiring Board - MAIN Board (Side B) - 37
5-15. Schematic Diagram - MAIN Board (1/3) - 38
5-16. Schematic Diagram - MAIN Board (2/3) - 39
5-17. Schematic Diagram - MAIN Board (3/3) - 40
5-18. Schematic Diagram - AMP Section - 41
5-19. Printed Wiring Board - AMP Section (1/2) - 42
5-20. Printed Wiring Boards - AMP Section (2/2) - 43
5-21. Printed Wiring Boards - HP/JOG1/JOG2/USB Boards - 44
5-22. Schematic Diagram - HP/JOG1/JOG2/USB Boards - 45
5-23. Printed Wiring Board - FL-NET Board - 46
5-24. Schematic Diagram - FL-NET Board - 47
5-25. Printed Wiring Boards - POWER SUPPLY Section - 48
5-26. Schematic Diagram - POWER SUPPLY Section - 49

6. EXPLODED VIEWS
6-1. Overall Section 62
6-2. Front Panel Section 63
6-3. Rear Panel Section 64
6-4. MAIN Board Section 65
6-5. Chassis Section 66
6-6. CD Mechanism Deck Section (CDM77B-K6BD94DC) 67

7. ELECTRICAL PARTS LIST 68

Trademarks, etc.

- PARTY STREAMING and PARTY STREAMING logo are trademarks of Sony Corporation.
- VAIO and VAIO Media are registered trademarks of Sony Corporation.
- MPEG Layer-3 audio coding technology and patents licensed from Fraunhofer IIS and Thomson.
- Microsoft, Windows, Windows Vista, Windows 7™, Windows Media are trademarks or registered trademarks of Microsoft Corporation in the United States and/or other countries.
- Mac and Macintosh are trademarks of Apple Inc.
- AirPlay, the AirPlay logo, iPhone, iPod, iPod classic, iPod nano, and iPod touch are trademarks of Apple Inc., registered in the U.S. and other countries.
- "Made for iPod," and "Made for iPhone" mean that an electronic accessory has been designed to connect specifically to iPod or iPhone, respectively, and has been certified by the developer to meet Apple performance standards. Apple is not responsible for the operation of this device or its compliance with safety and regulatory standards. Please note that the use of this accessory with iPod or iPhone may affect wireless performance.
- Apple is not responsible for the operation of this device or its compliance with safety and regulatory standards.
- "Wi-Fi CERTIFIED" is a mark of the Wi-Fi Alliance.
- DLNA®, the DLNA Logo and DLNA CERTIFIED™ are trademarks, service marks, or certification marks of the Digital Living Network Alliance.
- Wake-on-LAN is a trademark of International Business Machines Corporation in the United States.
- This product is protected by certain intellectual property rights of Microsoft Corporation. Use or distribution of such technology outside of this product is prohibited without a license from Microsoft or an authorized Microsoft subsidiary.
- The system names and product names indicated in this manual are generally the trademarks or registered trademarks of the manufacturer.
- In this manual, Microsoft Windows XP Home Edition, Microsoft Windows XP Professional and Microsoft Windows XP Media Center Edition are referred to as Windows XP.
- In this manual, Microsoft Windows Vista Home Basic, Microsoft Windows Vista Home Premium, Microsoft Windows Vista Business and Microsoft Windows Vista Ultimate are referred to as Windows Vista.
- In this manual, Microsoft Windows 7 Starter, Microsoft Windows 7 Home Premium, Microsoft Windows 7 Professional, Microsoft Windows 7 Ultimate are referred to as Windows 7.
- ™ and ® marks are omitted in this manual.

CLASS 1 LASER PRODUCT
LUOKAN 1 LASERLAITE
KLASS 1 LASERAPPARAT

This appliance is classified as a CLASS 1 LASER product. This marking is located on the rear exterior.

NOTES ON CHIP COMPONENT REPLACEMENT

- Never reuse a disconnected chip component.
- Notice that the minus side of a tantalum capacitor may be damaged by heat.

FLEXIBLE CIRCUIT BOARD REPAIRING

- Keep the temperature of soldering iron around 270 °C during repairing.
- Do not touch the soldering iron on the same conductor of the circuit board (within 3 times).
- Be careful not to apply force on the conductor when soldering or unsoldering.

CAUTION
Use of controls or adjustments or performance of procedures other than those specified herein may result in hazardous radiation exposure.

SAFETY-RELATED COMPONENT WARNING!

COMPONENTS IDENTIFIED BY MARK ⚠ OR DOTTED LINE WITH MARK ⚠ ON THE SCHEMATIC DIAGRAMS AND IN THE PARTS LIST ARE CRITICAL TO SAFE OPERATION. REPLACE THESE COMPONENTS WITH SONY PARTS WHOSE PART NUMBERS APPEAR AS SHOWN IN THIS MANUAL OR IN SUPPLEMENTS PUBLISHED BY SONY.

SECTION 1
SERVICING NOTES

NOTES ON HANDLING THE OPTICAL PICK-UP BLOCK OR BASE UNIT

The laser diode in the optical pick-up block may suffer electrostatic break-down because of the potential difference generated by the charged electrostatic load, etc. on clothing and the human body. During repair, pay attention to electrostatic break-down and also use the procedure in the printed matter which is included in the repair parts.
The flexible board is easily damaged and should be handled with care.

NOTES ON LASER DIODE EMISSION CHECK

The laser beam on this model is concentrated so as to be focused on the disc reflective surface by the objective lens in the optical pickup block. Therefore, when checking the laser diode emission, observe from more than 30 cm away from the objective lens.

UNLEADED SOLDER

Boards requiring use of unleaded solder are printed with the lead-free mark (LF) indicating the solder contains no lead.
(**Caution:** Some printed circuit boards may not come printed with the lead free mark due to their particular size)

: LEAD FREE MARK

Unleaded solder has the following characteristics.

- Unleaded solder melts at a temperature about 40 °C higher than ordinary solder.
  Ordinary soldering irons can be used but the iron tip has to be applied to the solder joint for a slightly longer time.
  Soldering irons using a temperature regulator should be set to about 350 °C.
  Caution: The printed pattern (copper foil) may peel away if the heated tip is applied for too long, so be careful!
- Strong viscosity
  Unleaded solder is more viscous (sticky, less prone to flow) than ordinary solder so use caution not to let solder bridges occur such as on IC pins, etc.
- Usable with ordinary solder
  It is best to use only unleaded solder but unleaded solder may also be added to ordinary solder.

RELEASING THE DISC TRAY LOCK

The disc tray lock function for the antitheft of an demonstration disc in the store is equipped.

Releasing Procedure:

1. Press the [I/⏻] button to turn the power on.
2. Press two buttons of [■] and [⏏] for 5 seconds.
3. The message "UNLOCKED" is displayed on the fluorescent indicator tube and the disc tray is unlocked.

Note: When "LOCKED"is displayed, the disc tray lock is not released by turning power on/off with the [I/⏻] button.

NOTE OF REPLACING THE MOTOR BOARD

When the MOTOR board is damaged, exchange the LOADING (BK) ASSY.

NOTE OF REPLACING THE IC107, Q1101, Q1102, Q2101 AND Q2102 ON THE AMP BOARD

IC107, Q1101, Q1102, Q2101 and Q2102 on the AMP board cannot exchange with single. When these parts are damaged, exchange the complete mounted board.

NOTE OF REPLACING THE CN5003 ON THE NET BOARD

CN5003 on the NET board cannot exchange with single. When this part is damaged, exchange the complete mounted board.

MODEL IDENTIFICATION

– Rear Panel –

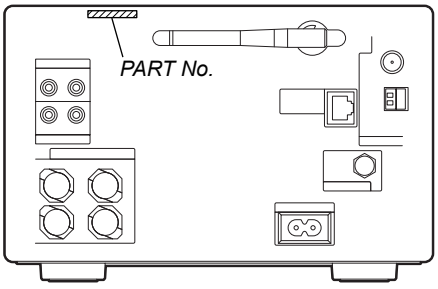

Model	Part No.
HCD-G2NiP: AEP model	4-275-277-0□
HCD-G2BNiP: AEP and UK models	4-275-277-1□
HCD-G2BNiP: Australian model	4-275-277-2□

PRECAUTIONS FOR DISASSEMBLY AND ASSEMBLY

Many of the internal parts in this unit use iron plates. Be careful not to injure your hands while carrying out disassembly or assembly procedures.

PRECAUTIONS FOR OPERATION CHECKS

If checking operations with the power on, be sure to connect the GND wires (earth terminals) connected to the AMP board and MAIN board to ground.
The units may fail to operate and parts may become damaged if the GND wires are not connected properly. Be sure to connect the GND wires before checking either board.
If the GND wire (earth terminal) is not long enough to reach when the circuit board is removed, use alligator clips or a similar part to extend the length to enable connection to ground.

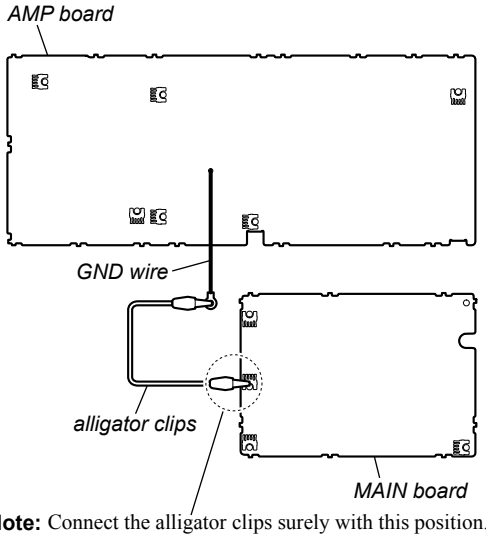

Note: Connect the alligator clips surely with this position.

NOTE OF REPLACING THE WIRELESS LAN MODULE (MOD1)

When replacing the wireless LAN module (MOD1), MAC address is changed. Print the following explanation, cut it, and hand over it to the customer with the unit, when returning the unit that the repair is completed to the customer.

> MAC address of the main unit has been changed by this repair.
> When using the MAC address filtering function of connection destination access point equipment, set it again..

CHECKING METHOD OF NETWORK OPERATION

It is necessary to check the network operation, when replacing the wireless LAN module (MOD1). Check the operation of wireless and wired LAN, according to the following method.

1. Checking Method of Wireless LAN Operation

Check that access point is recognized surely.

Necessary Equipment:

Wireless access point with router function (AP)

Procedure:

1. Turn the [FUNCTION] knob to select the HOME NETWORK, MUSIC SERVICES or AirPlay function.
2. Press the [⬆]/[⬇] buttons to select “Network,” then press the [ENTER] button.
3. Press the [⬆]/[⬇] buttons to select “Settings,” then press the [ENTER] button.
4. Press the [⬆]/[⬇] buttons to select “Wireless LAN Settings,” then press the [ENTER] button.

Note: If “Change Setting?” appears, select “OK,” then press the [ENTER] button.

5. Press the [⬆]/[⬇] buttons to select “Access Point Scan,” then press the [ENTER] button.
6. The system starts searching for access points, and displays a list of up to 20 available network name (SSID).
7. Check that access point (SSID) is displayed on the searching result.

Note: Refer to the instruction manual about details of the setting method.

2. Checking method of wired LAN operation

Check that access point is recognized surely.

Procedure:

1. Connect the main unit to the router or the hub, etc. with the network (LAN) cable.
2. Turn the [FUNCTION] knob to select the HOME NETWORK, MUSIC SERVICES or AirPlay function.
3. Press the [⬆]/[⬇] buttons to select “Network,” then press the [ENTER] button.
4. Press the [⬆]/[⬇] buttons to select “Settings,” then press the [ENTER] button.
5. Press the [⬆]/[⬇] buttons to select “Wired LAN Settings,” then press the [ENTER] button.
6. On the IP setting, press the [⬆]/[⬇] buttons to select “Auto,” then press the [ENTER] button.
7. On the proxy setting, press the [⬆]/[⬇] buttons to select “Do Not Use,” then press the [ENTER] button.
8. Press the [⬆]/[⬇] buttons to select “OK,” then press the [ENTER] button.
9. Perform the server settings.
10. Press the [OPTIONS] buttons to select “Network,” then press the [ENTER] button.
11. Press the [OPTIONS] buttons to select “Information,” then press the [ENTER] button.
12. Check that IP address can be acquired.

Note: Refer to the instruction manual about details of the setting method.

HOW TO OPEN THE TRAY WHEN POWER SWITCH TURN OFF

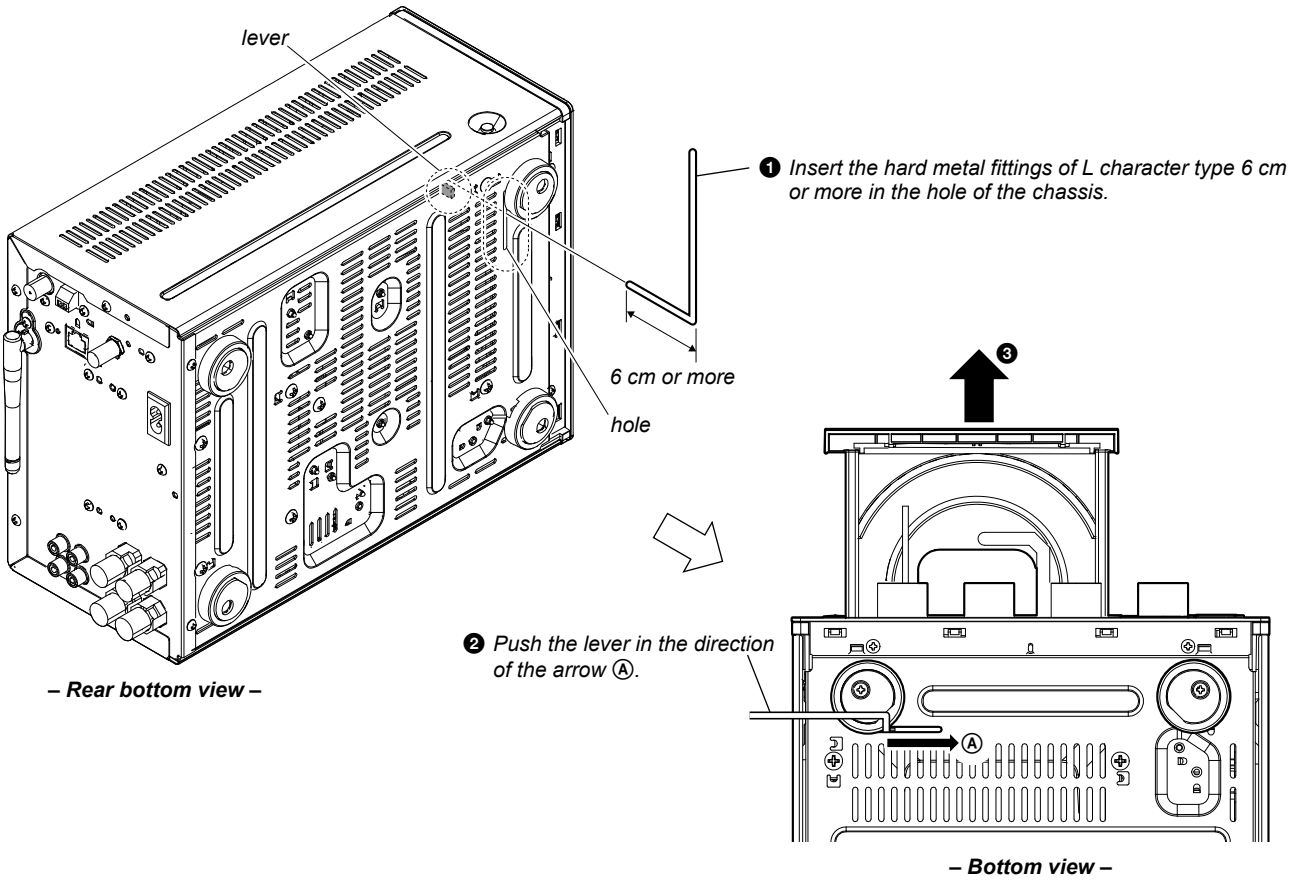

MAIN BOARD SERVICE POSITION

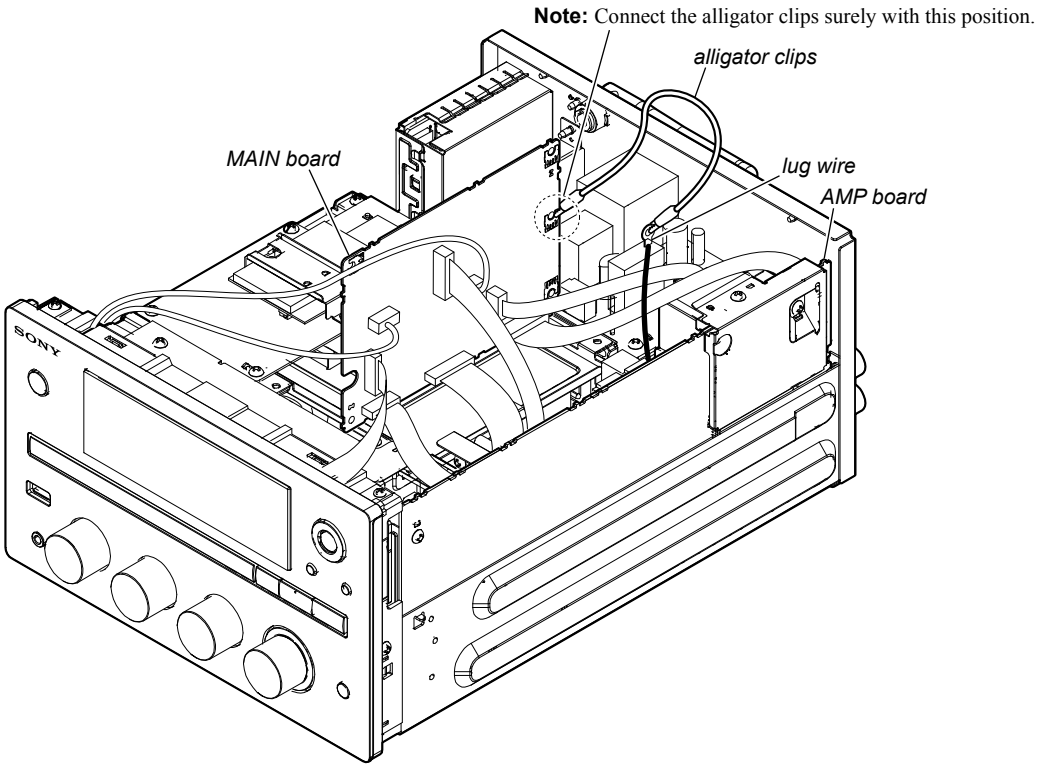

FL-NET, JOG1, JOG2, USB AND HP BOARD SERVICE POSITION

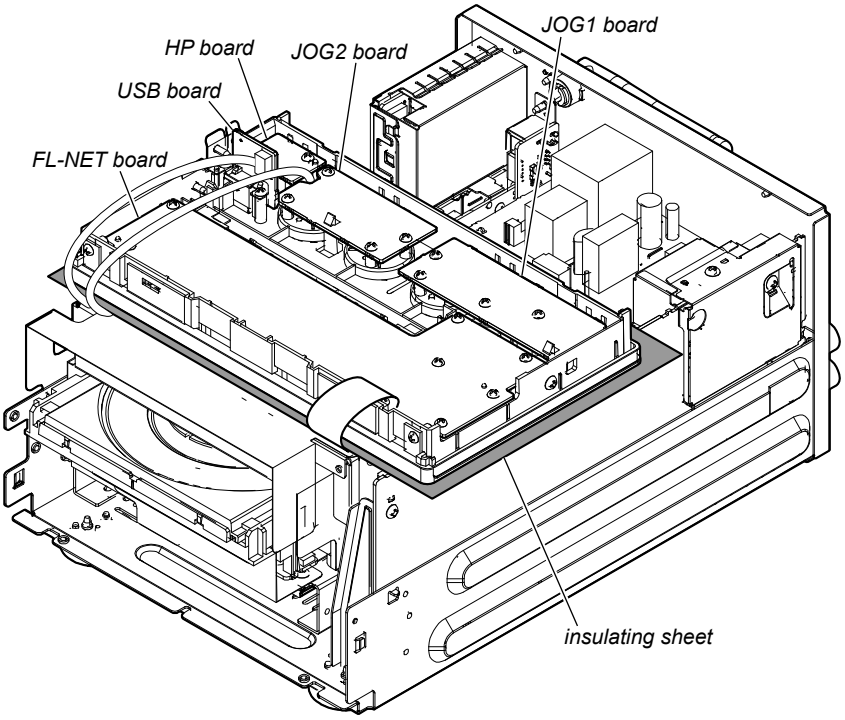

CD MECHANISM DECK SERVICE POSITION

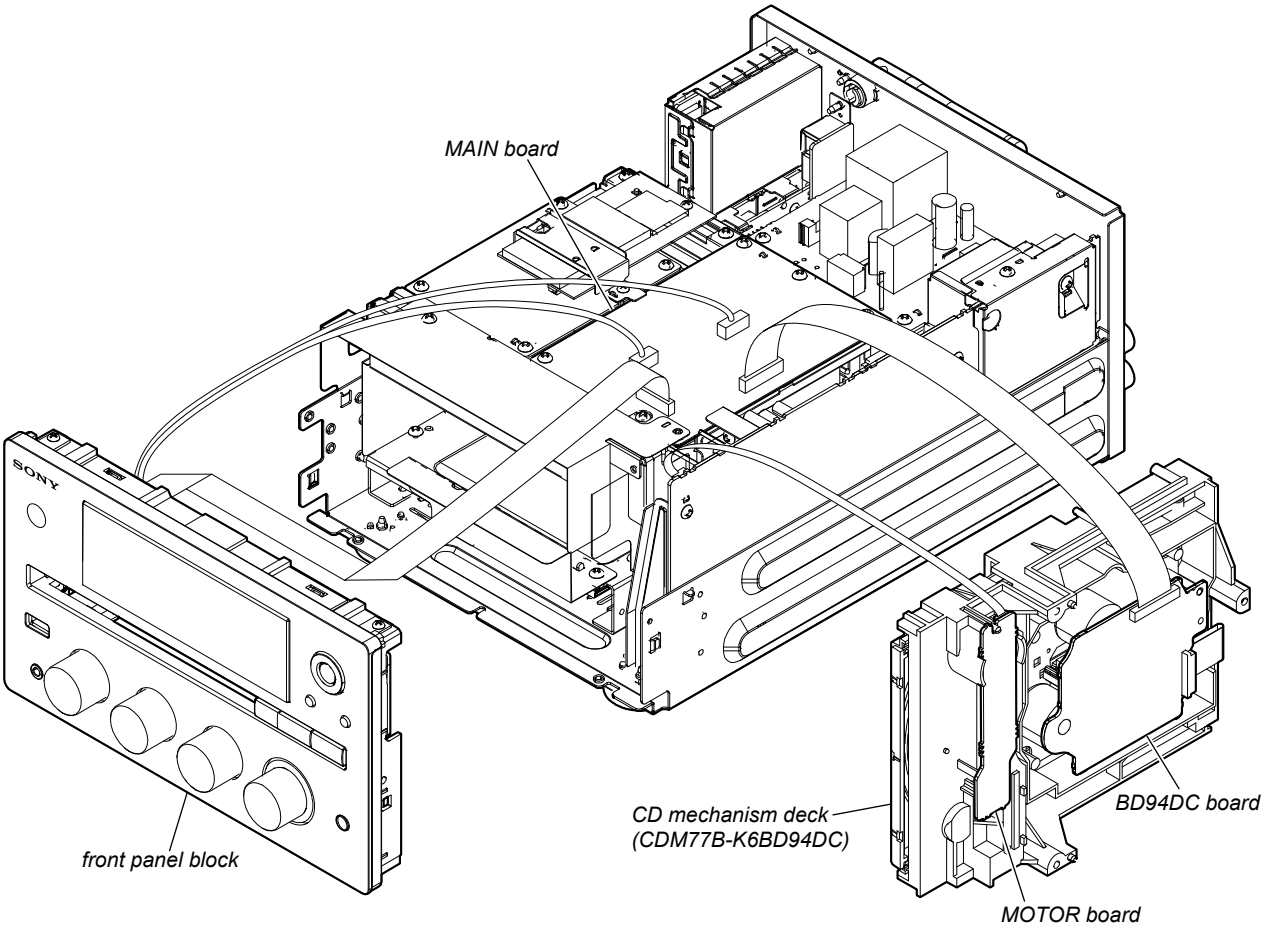

SUB-PT BOARD SERVICE POSITION

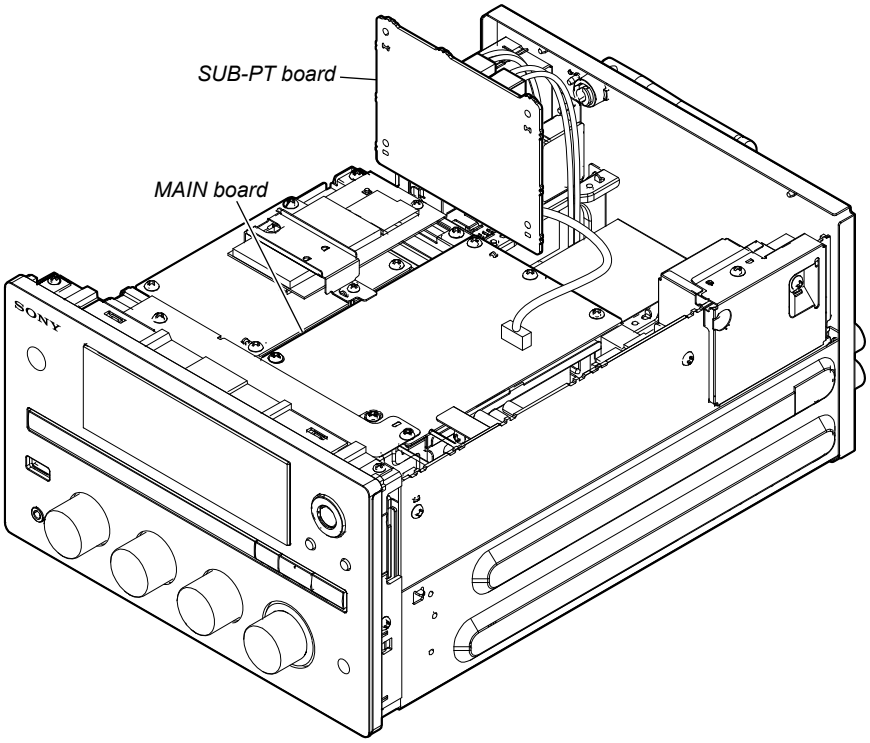

AMP BOARD SERVICE POSITION

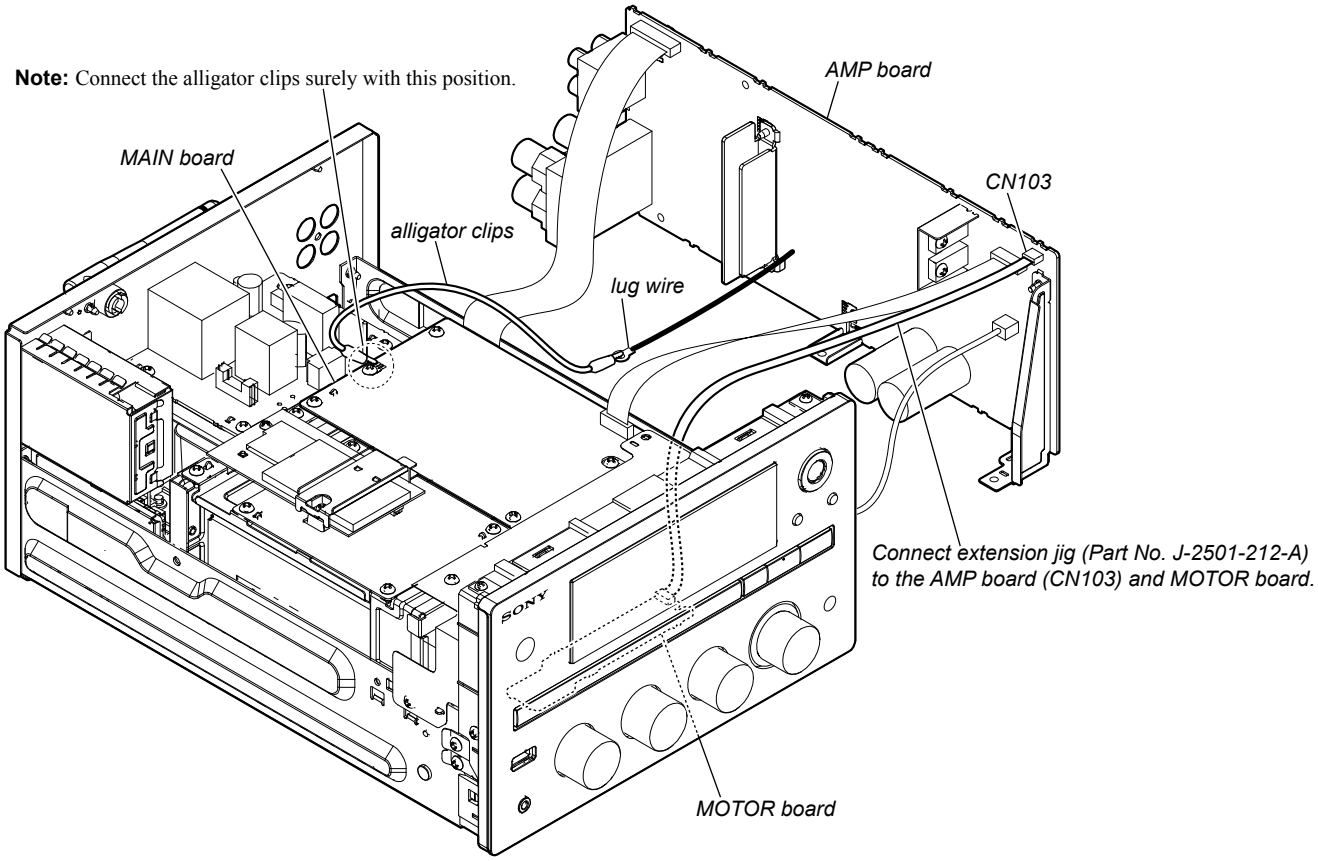

DCDC BOARD SERVICE POSITION

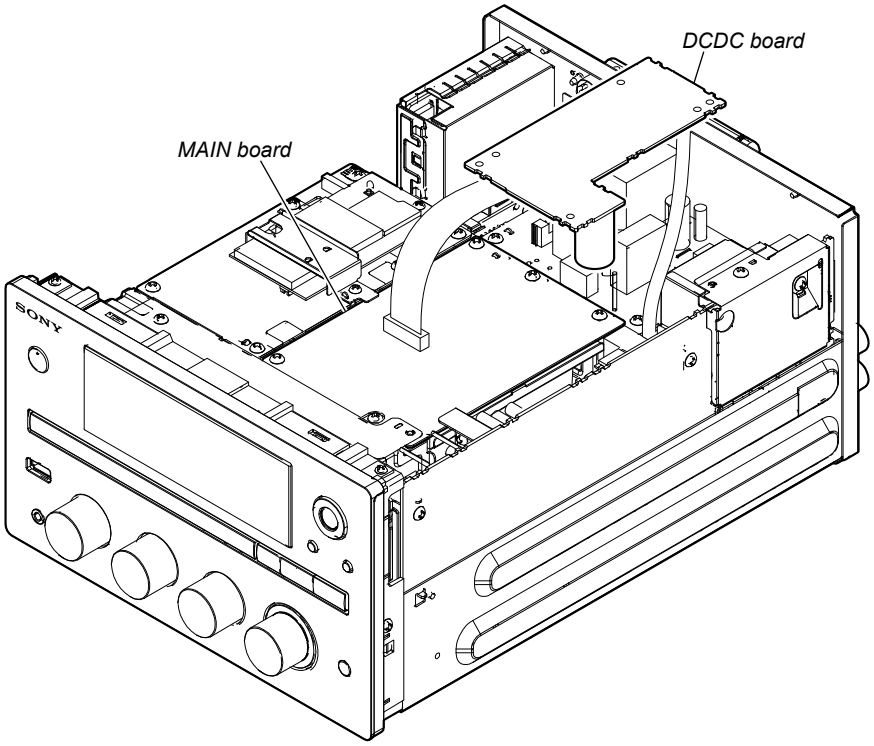

TUNER AND DAB BOARD SERVICE POSITION

Note: Both the flexible flat cable (9 core) can be connected with the CN406 or CN407 on MAIN board.
When you connect the flexible flat cable (9 core) with the CN407 on MAIN board so as not to connect it by mistake.

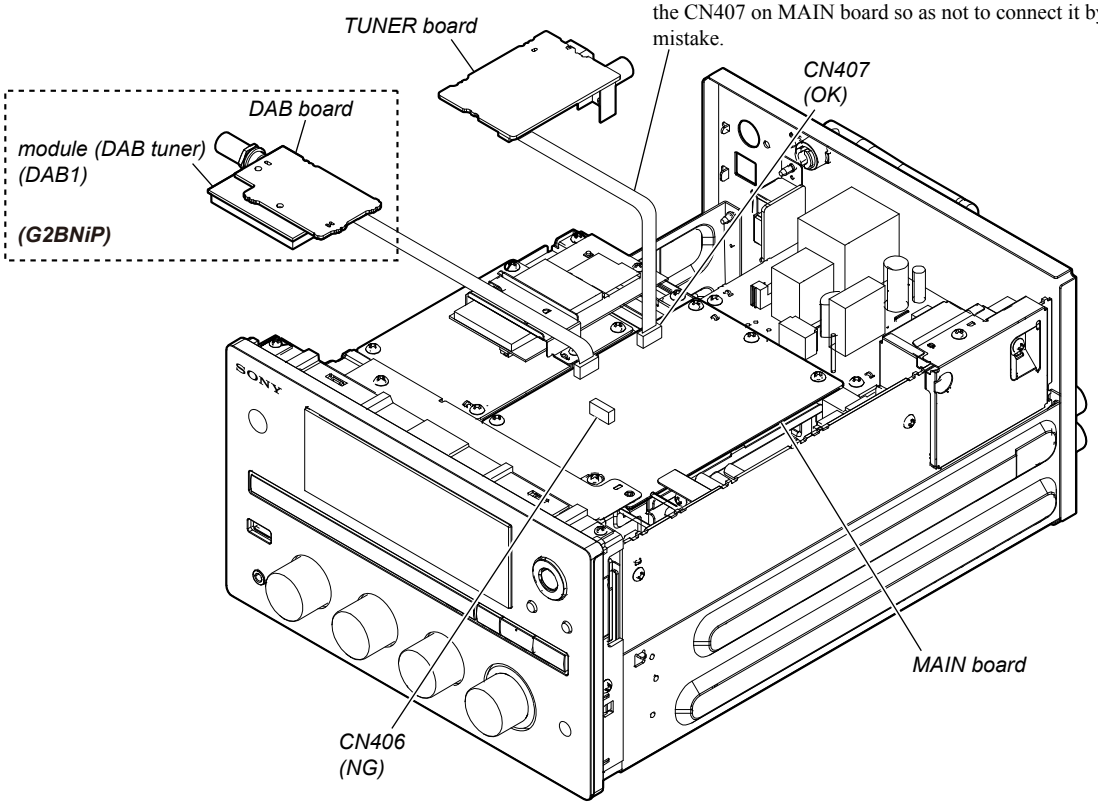

WIRE SETTING

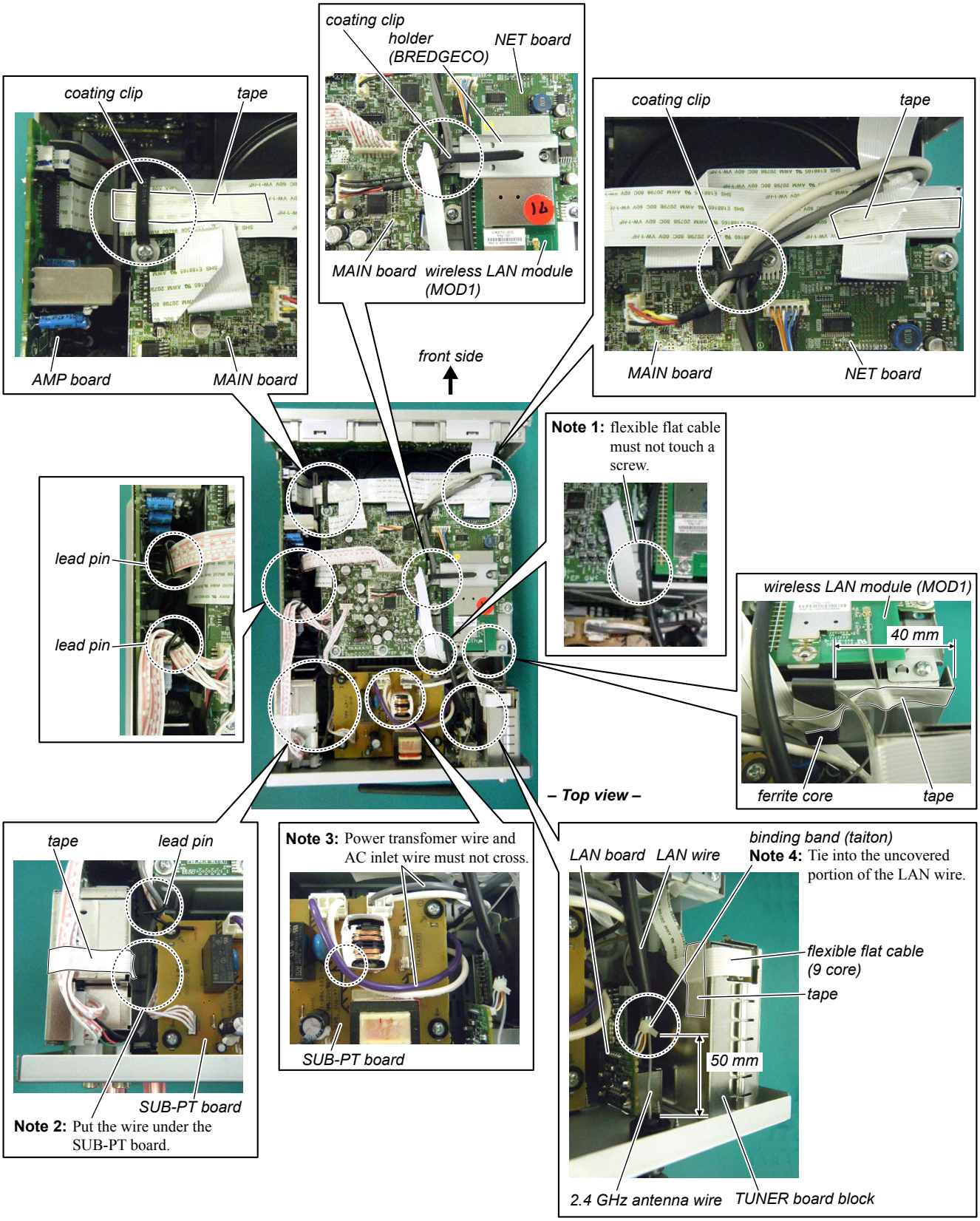

SECTION 2
DISASSEMBLY

- This set can be disassembled in the order shown below.

2-1. DISASSEMBLY FLOW

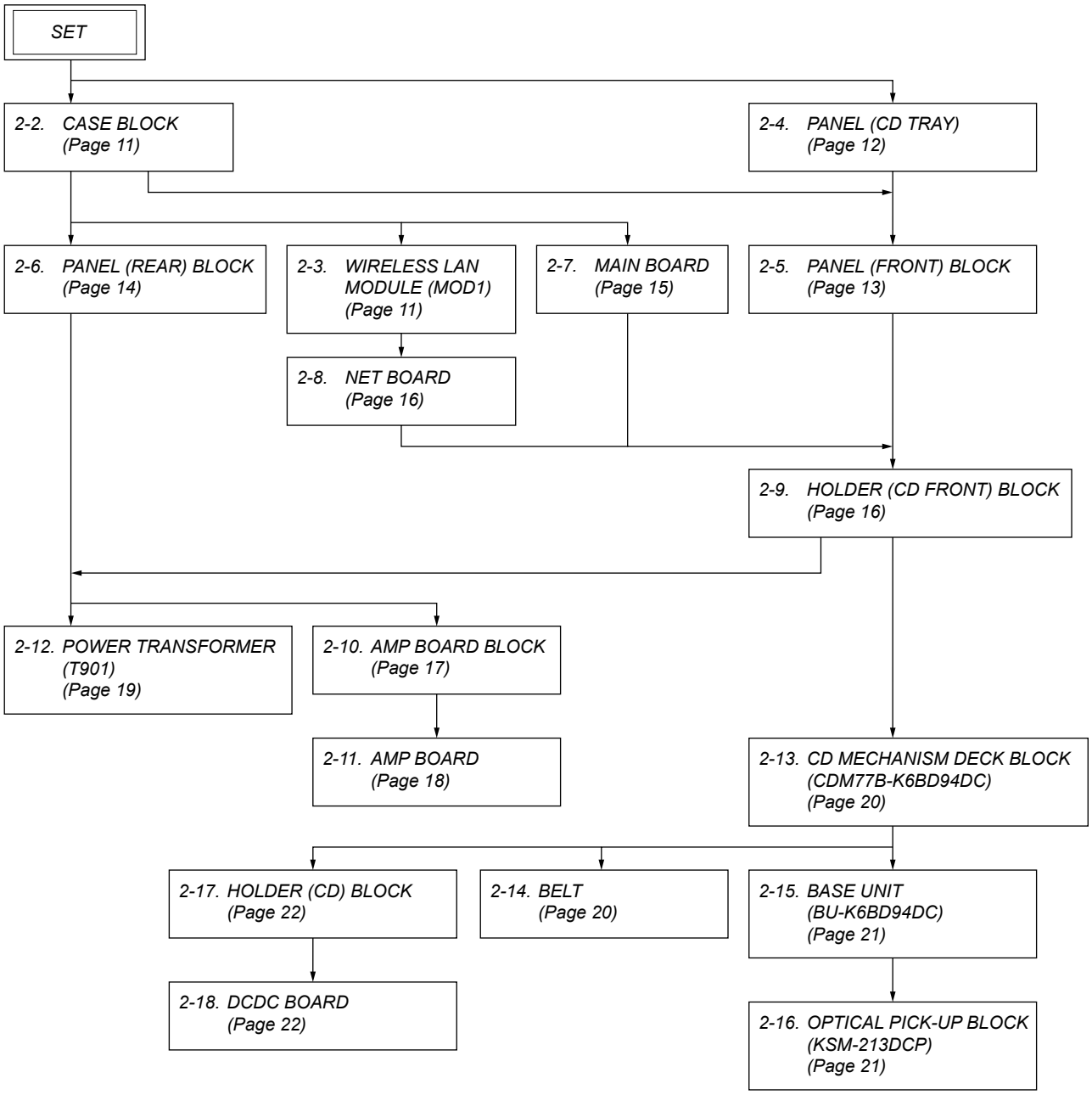

Note: Follow the disassembly procedure in the numerical order given.

2-2. CASE BLOCK

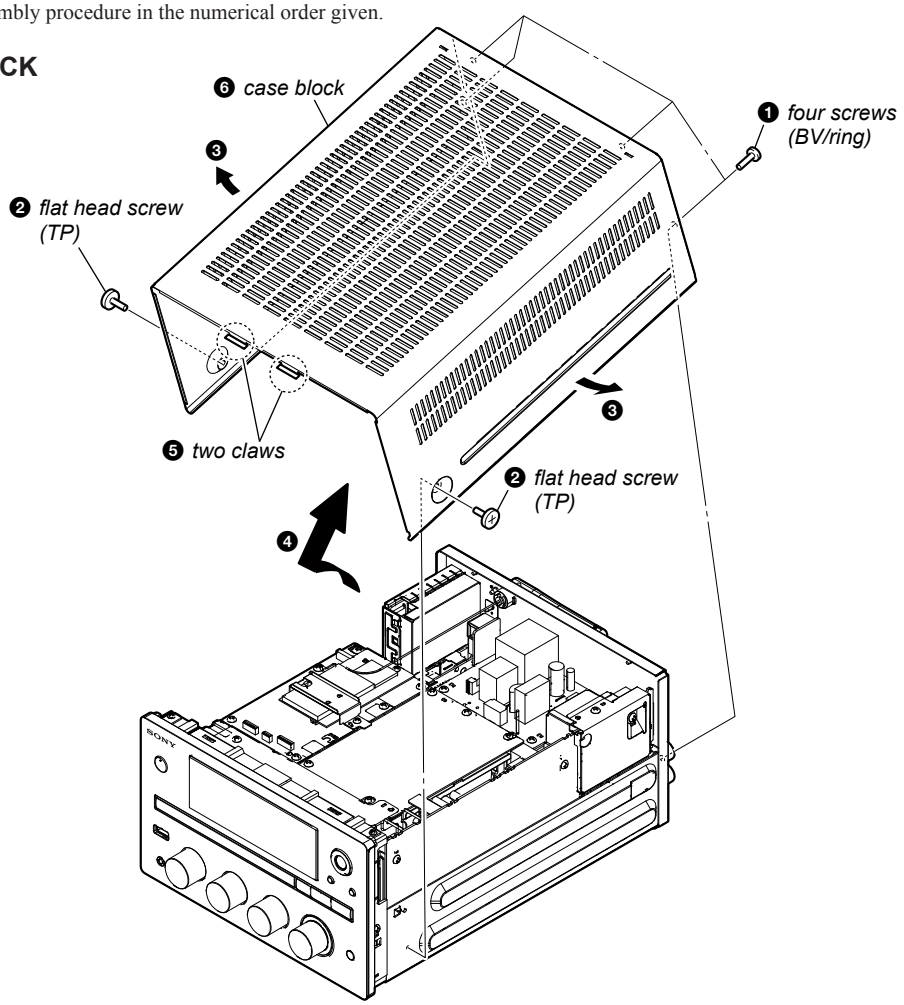

2-3. WIRELESS LAN MODULE (MOD1)

Note 1: Refer to "WIRE SETTING" on page 9 for wire setting.

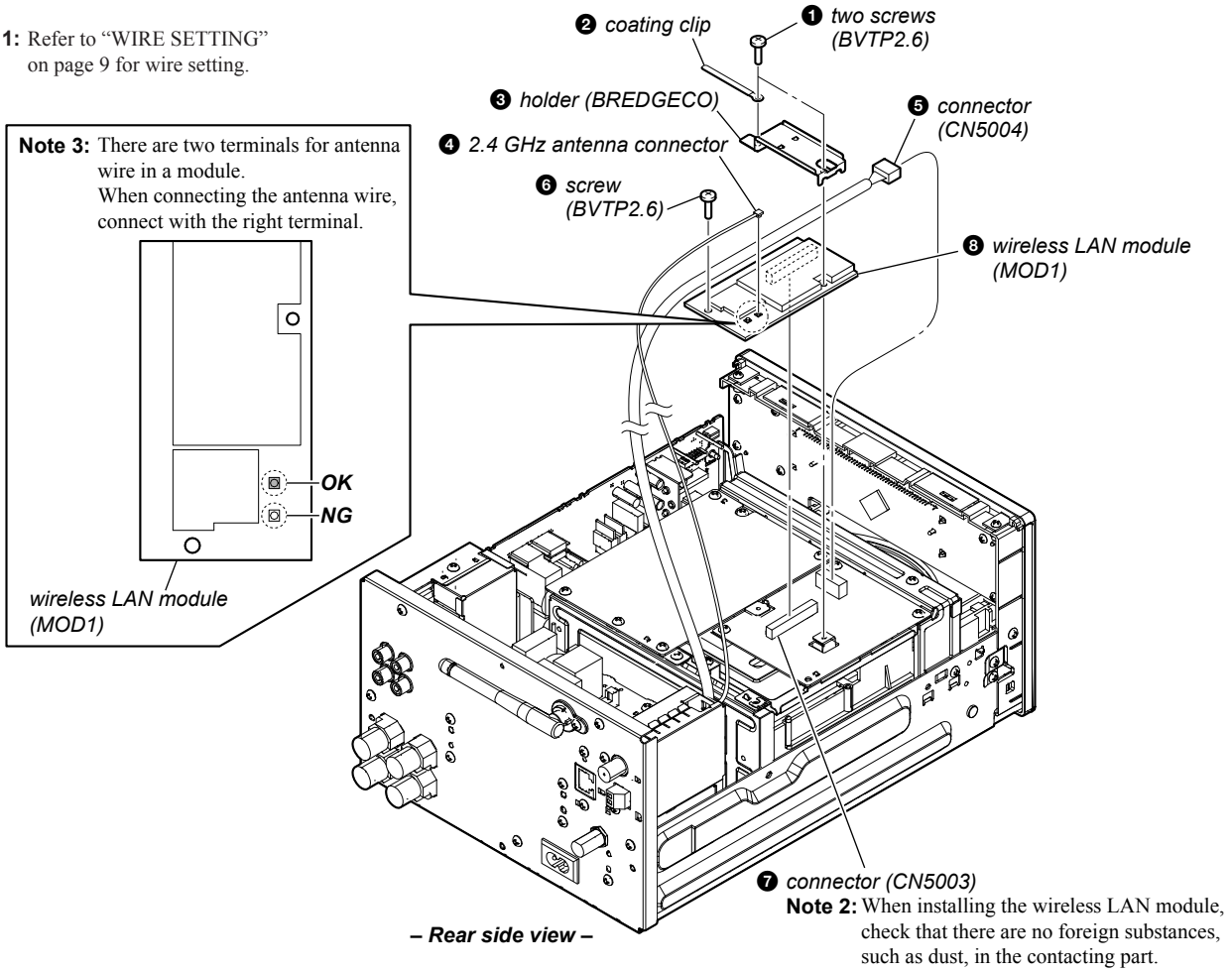

Note 3: There are two terminals for antenna wire in a module.
When connecting the antenna wire, connect with the right terminal.

Note 2: When installing the wireless LAN module, check that there are no foreign substances, such as dust, in the contacting part.

2-4. PANEL (CD TRAY)

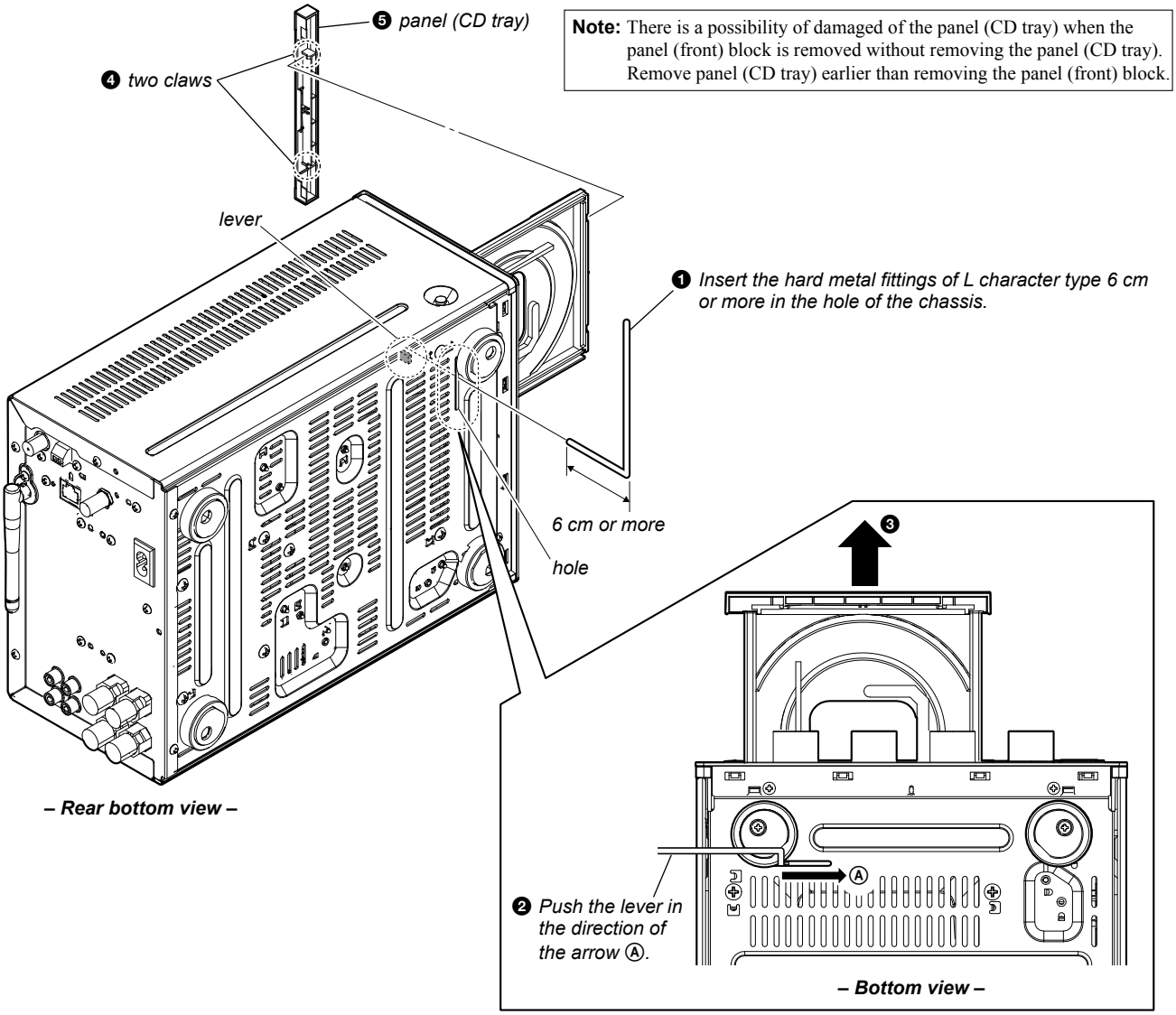

Note: There is a possibility of damaged of the panel (CD tray) when the panel (front) block is removed without removing the panel (CD tray). Remove panel (CD tray) earlier than removing the panel (front) block.

2-5. PANEL (FRONT) BLOCK

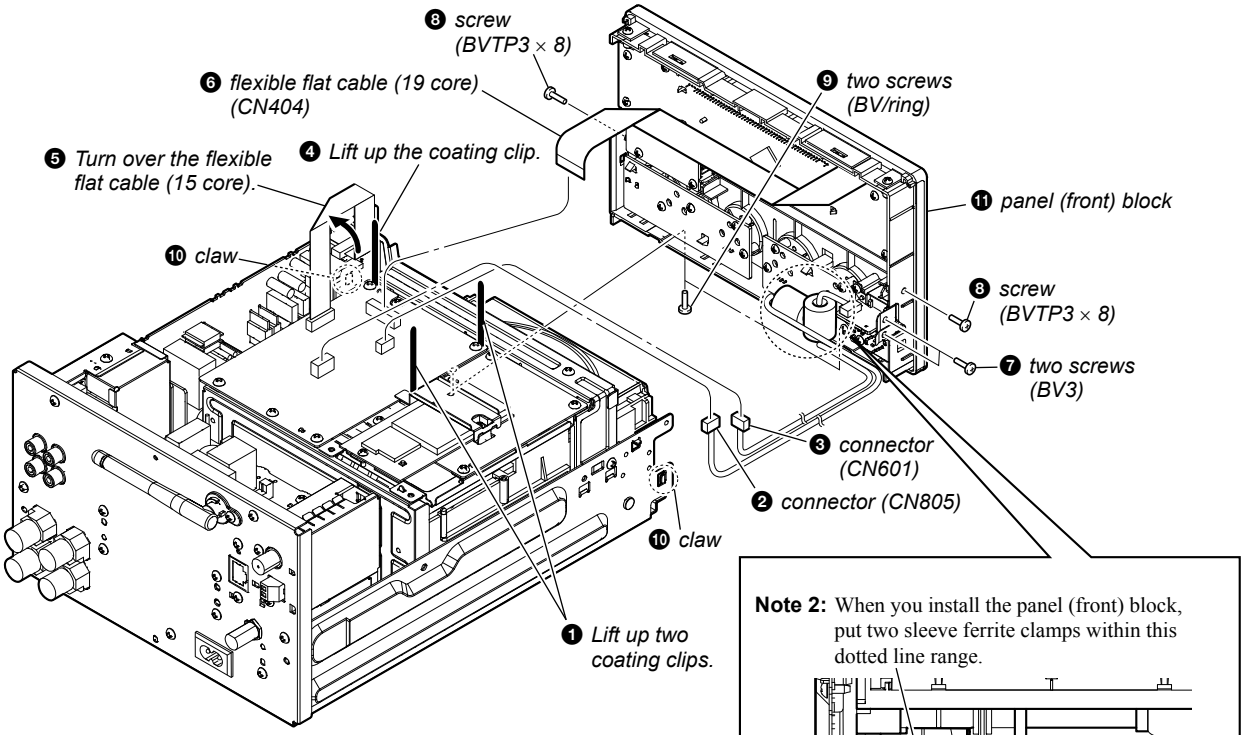

– Rear side view –

Note 1: There is a possibility of damaged of the panel (CD tray) when the panel (front) block is removed without removing the panel (CD tray). Remove panel (CD tray) earlier than removing the panel (front) block.

Note 2: When you install the panel (front) block, put two sleeve ferrite clamps within this dotted line range.

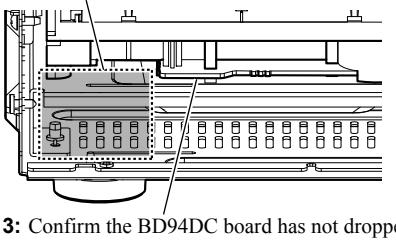

Note 3: Confirm the BD94DC board has not dropped.

Note 4: When you install the flexible flat cable, please install them correctly.
There is a possibility that this machine damages when not correctly installing it.

OK Insert is straight to the interior	NG Insert is incline
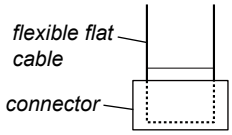	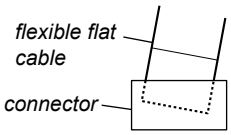

• ***Wire setting***

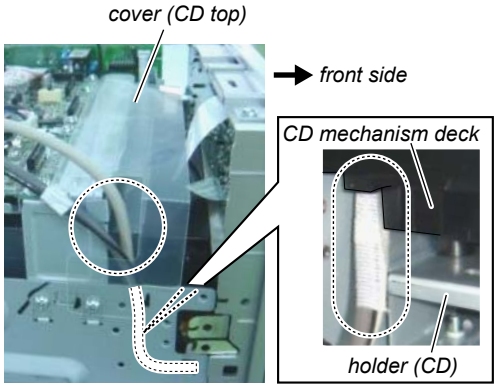

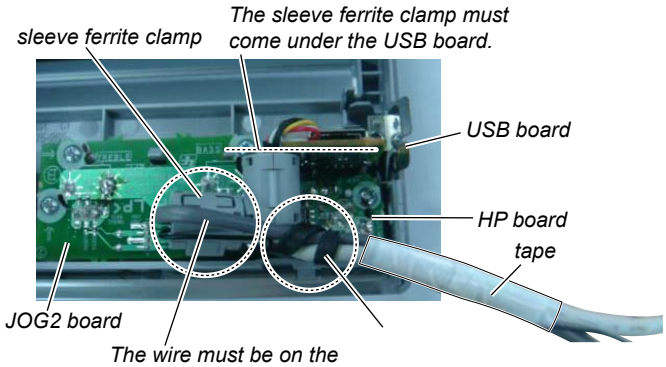

– Front panel inner view –

Note 5: Refer to "WIRE SETTING" on page 9 for the setting of those other than this.

2-6. PANEL (REAR) BLOCK

Note 1: Refer to "WIRE SETTING" on page 9 for wire setting.

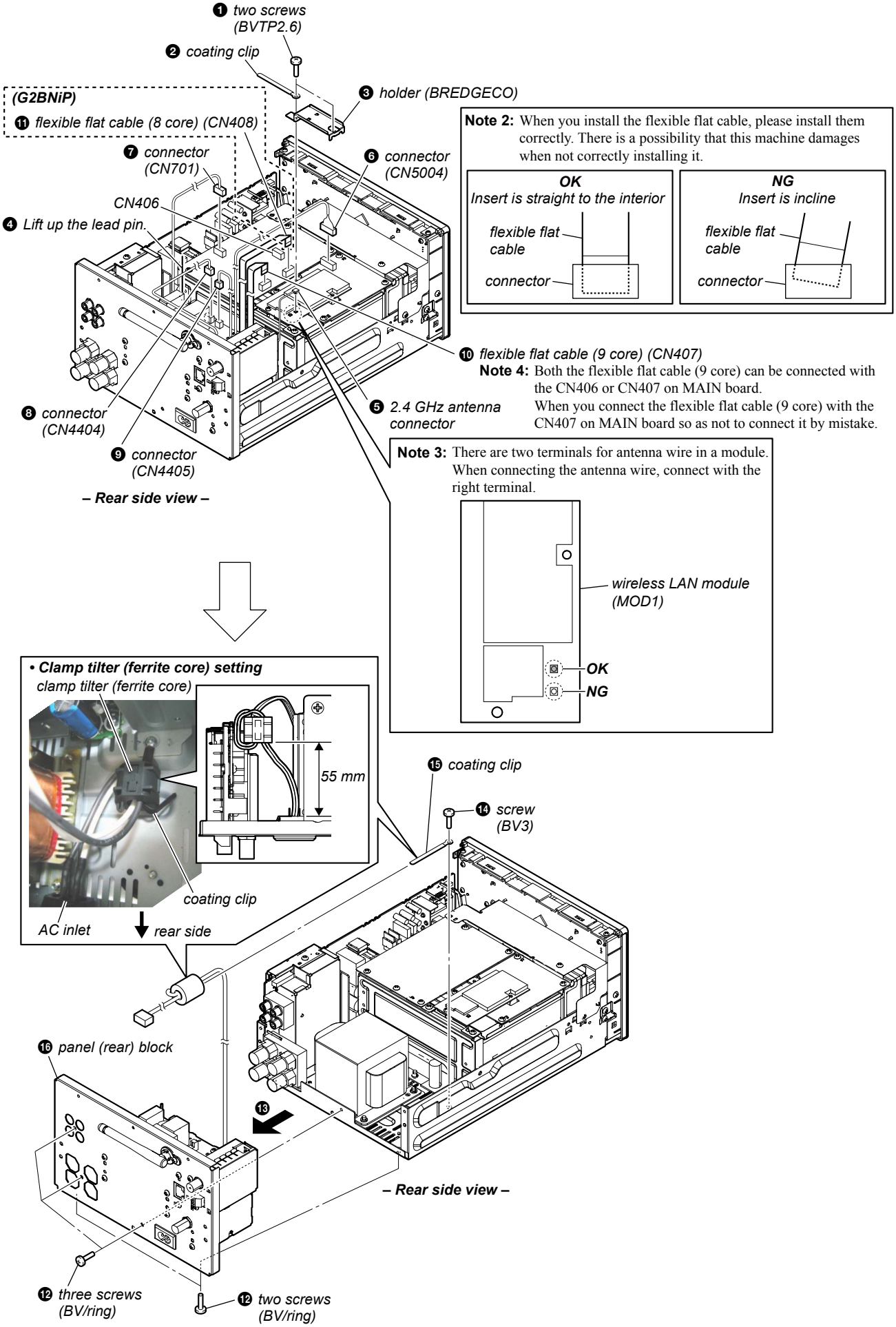

2-7. MAIN BOARD

Note 1: Refer to "WIRE SETTING" on page 9 for wire setting.

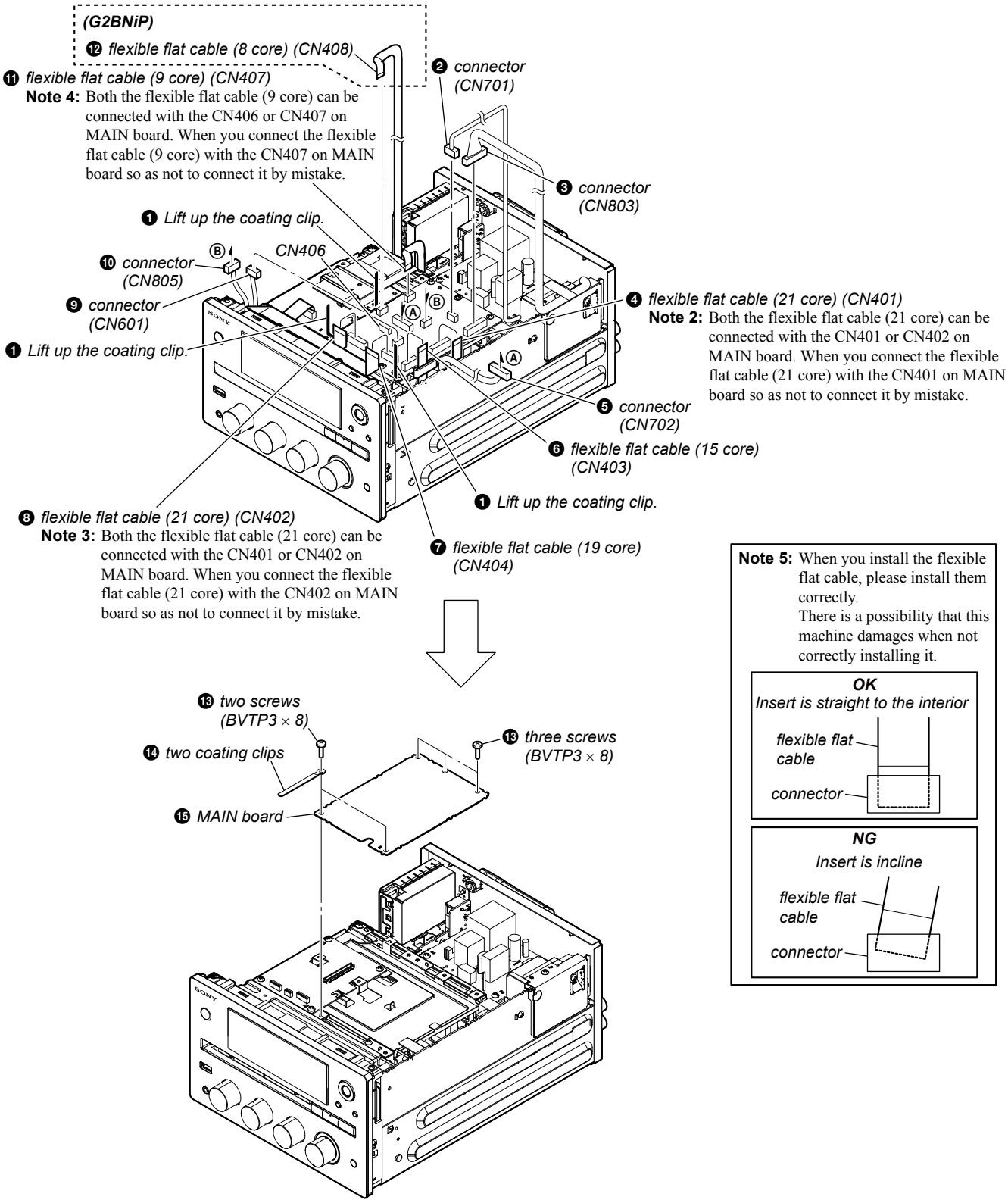

2-8. NET BOARD

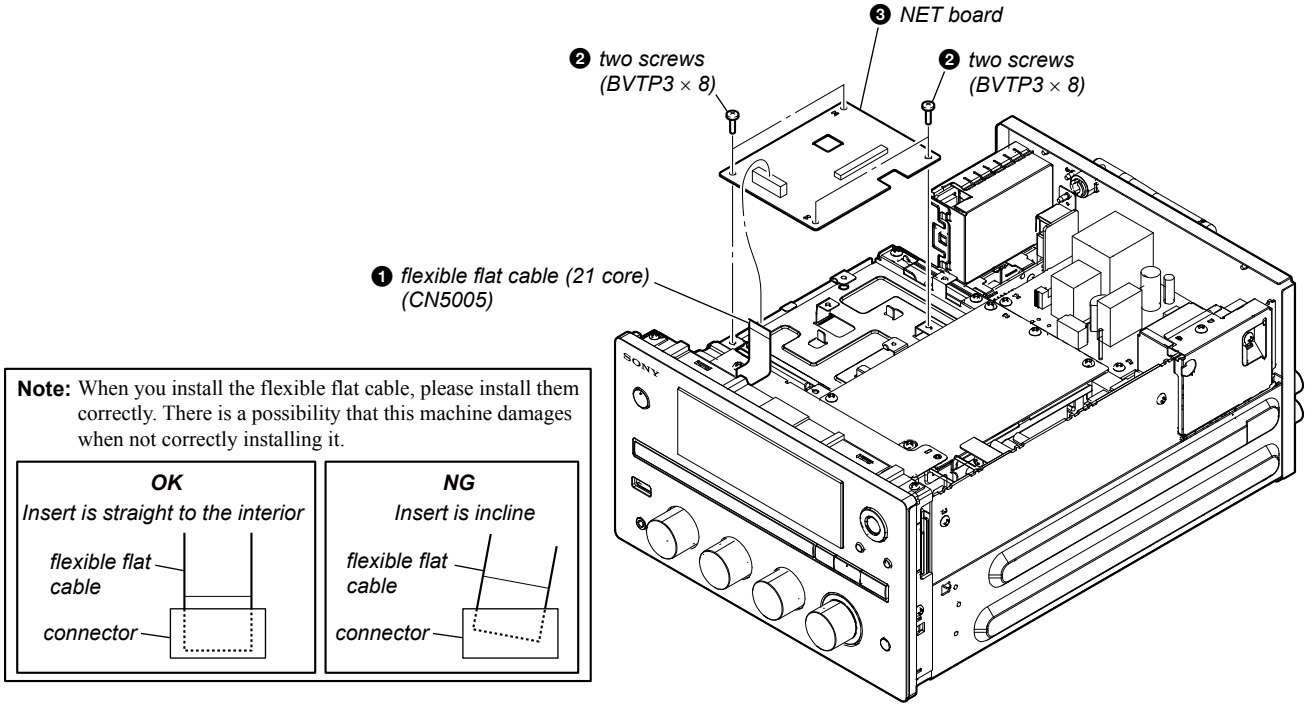

2-9. HOLDER (CD FRONT) BLOCK

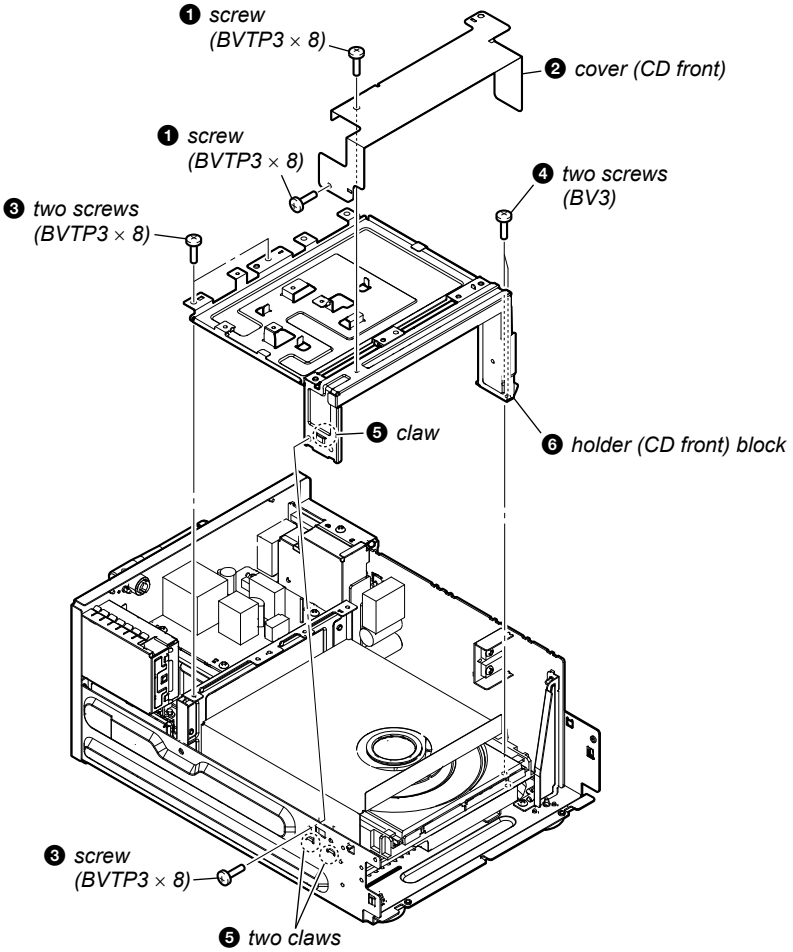

– Left front side view –

2-10. AMP BOARD BLOCK

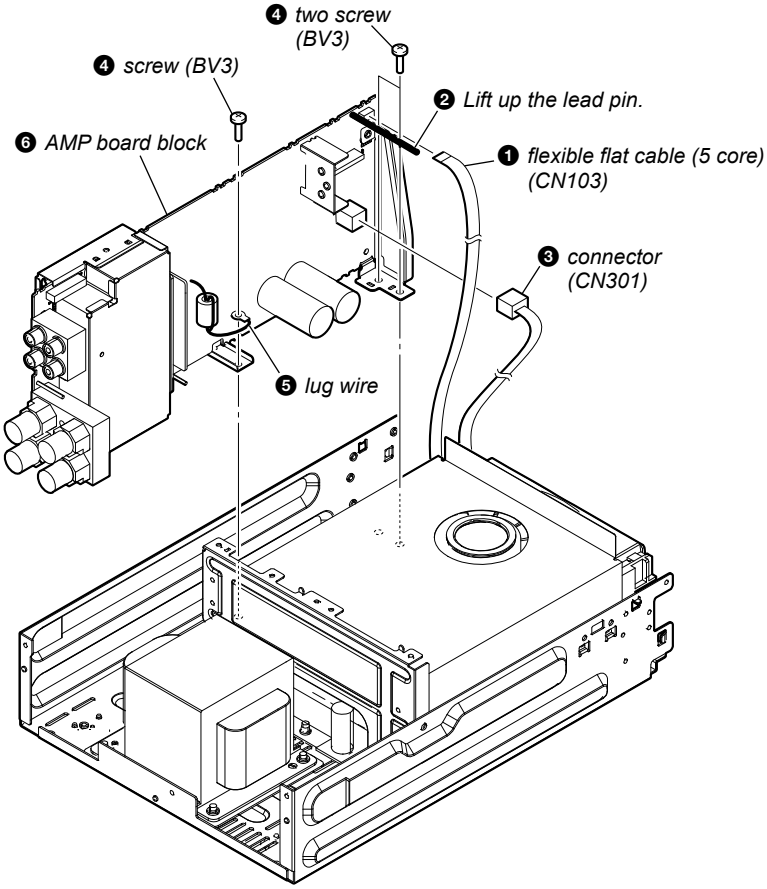

– Rear side view –

• ***Wire setting***

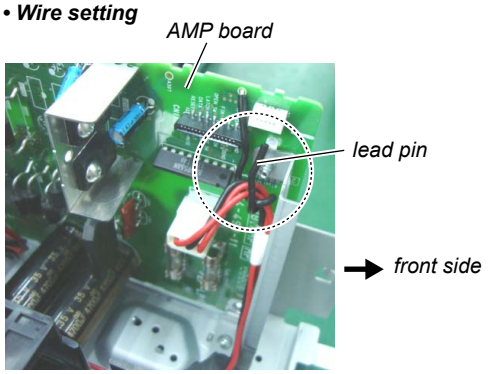

Note: When you install the flexible flat cable, please install them correctly. There is a possibility that this machine damages when not correctly installing it.

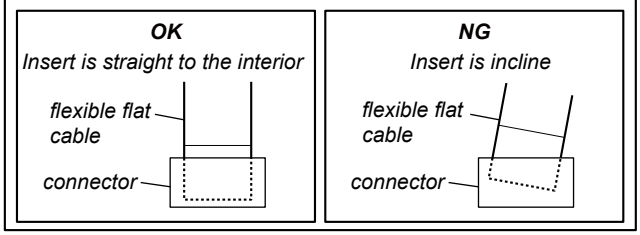

2-11. AMP BOARD

Note 1: When you install the flexible flat cable, please install them correctly. There is a possibility that this machine damages when not correctly installing it.

OK	NG
Insert is straight to the interior	Insert is incline

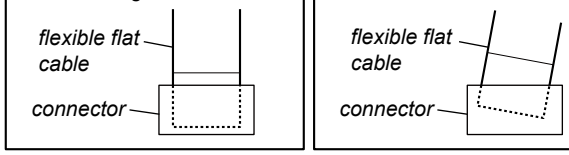

• ***Flexible flat cable (15 core) setting***

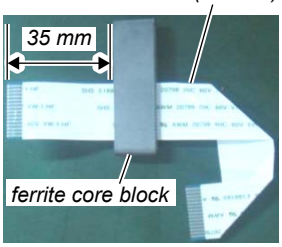

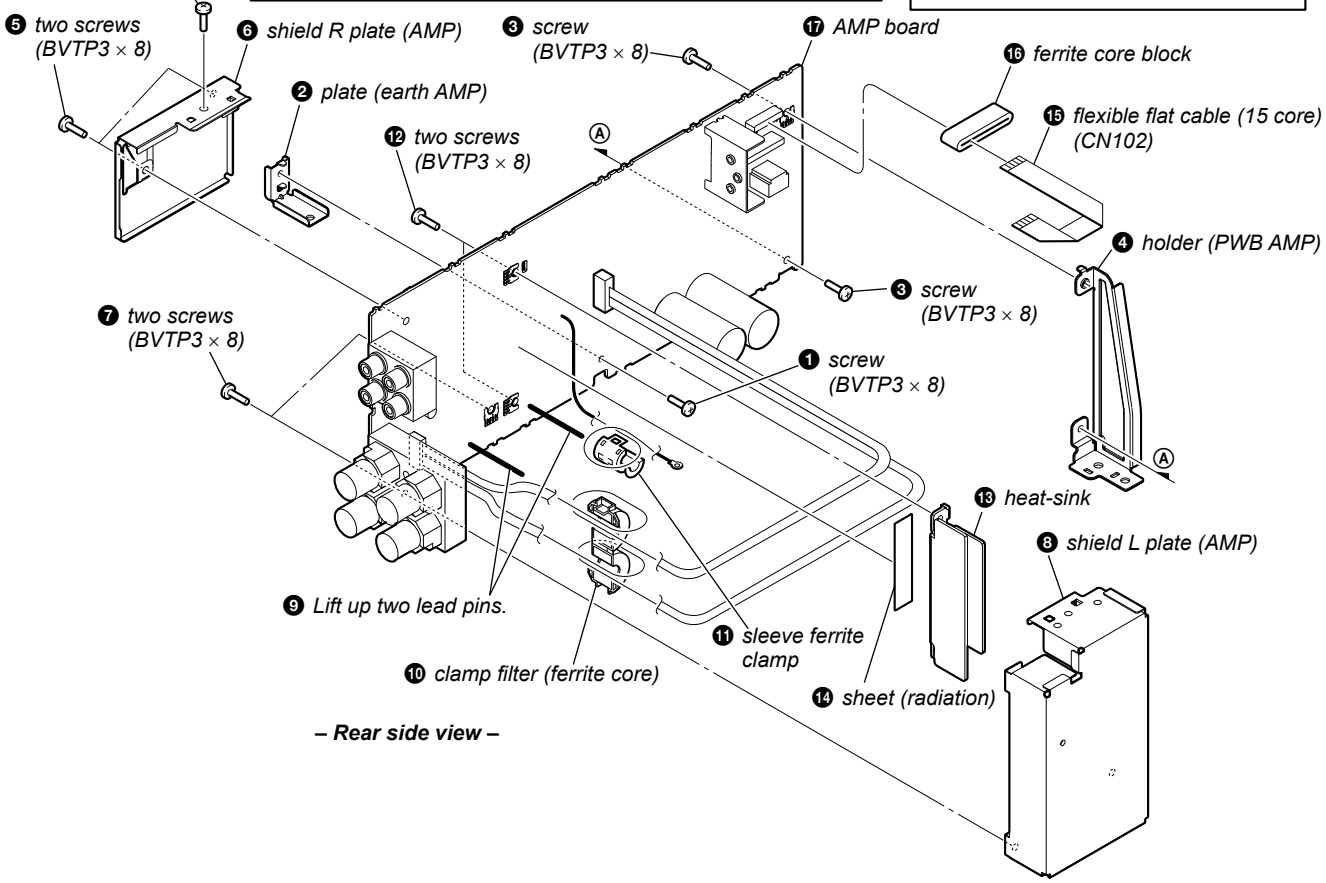

• ***Wire setting***

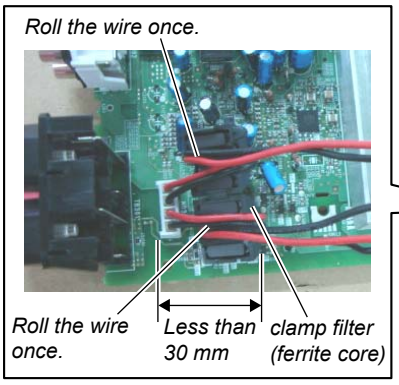

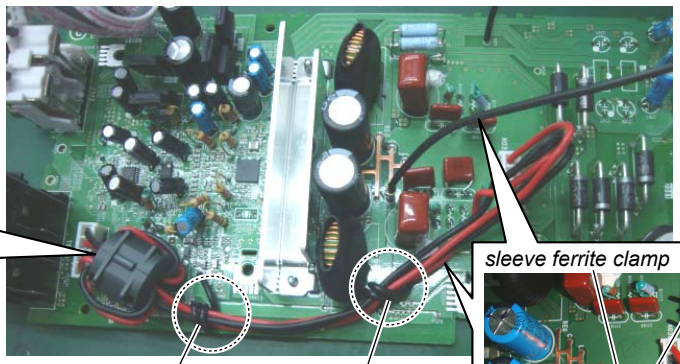

→ front side

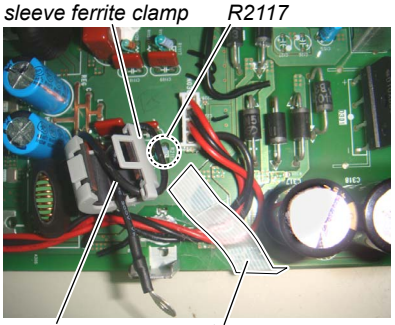

Note 2: Fix so that a wire cannot touch R2117.

2-12. POWER TRANSFORMER (T901)

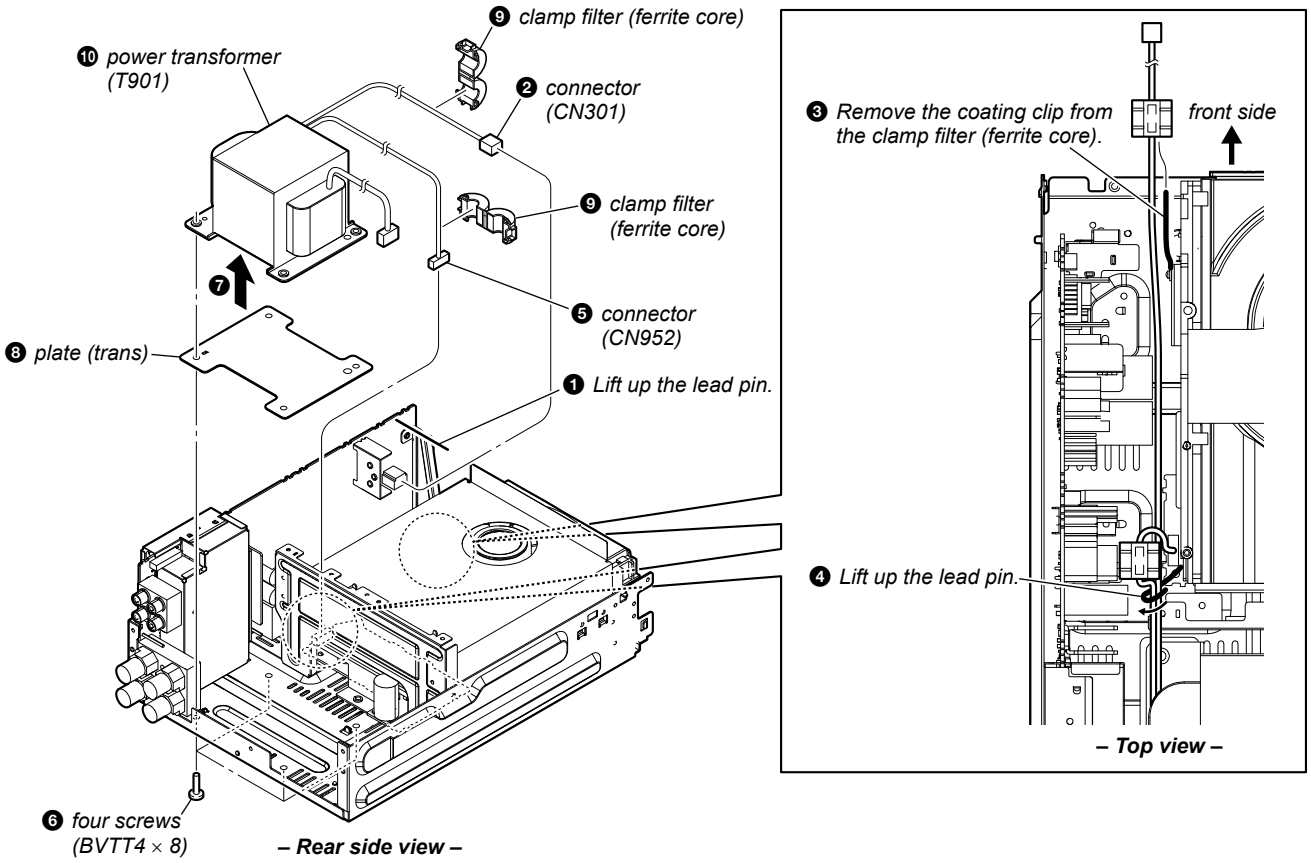

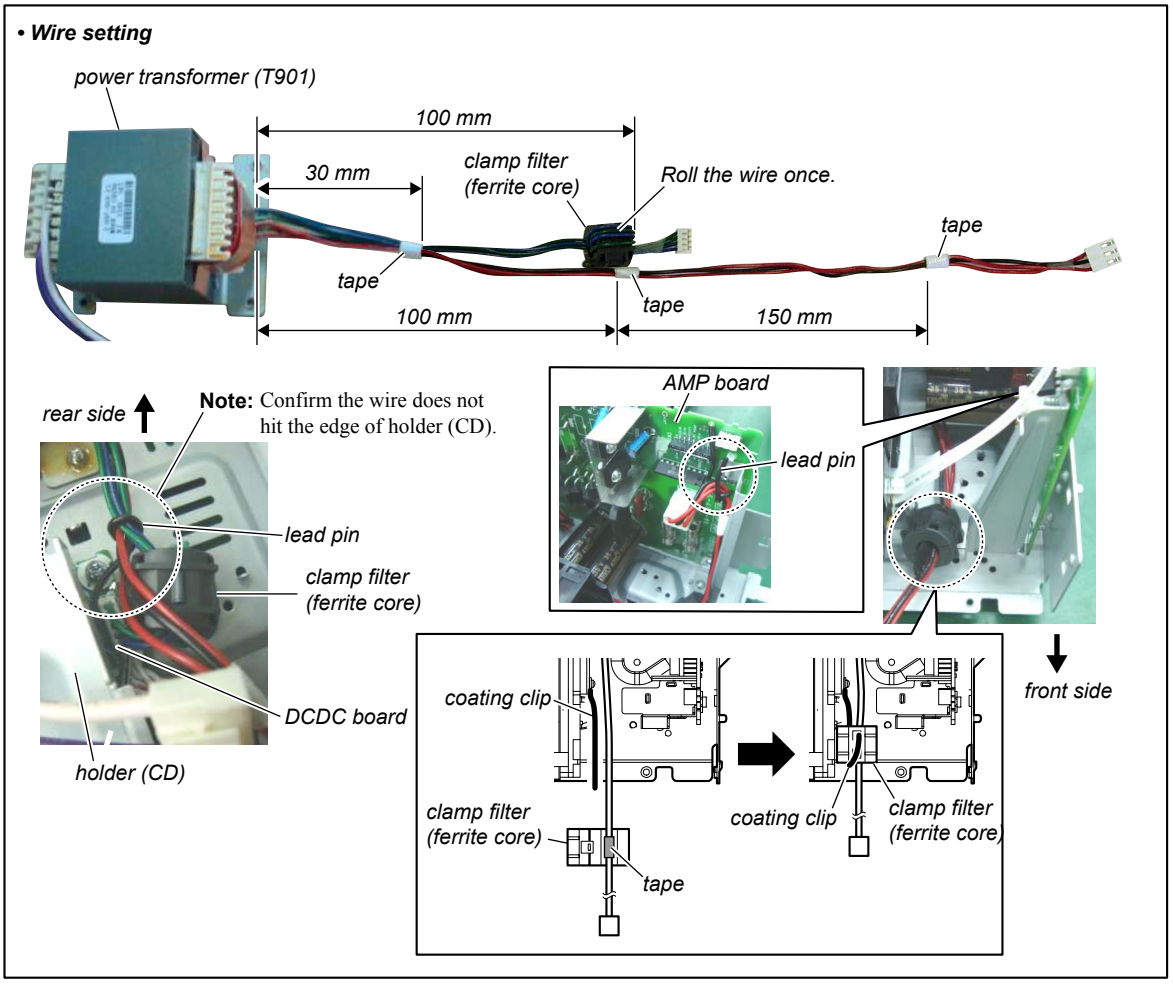

2-13. CD MECHANISM DECK BLOCK (CDM77B-K6BD94DC)

Note: When you install the flexible flat cable, please install them correctly. There is a possibility that this machine damages when not correctly installing it.

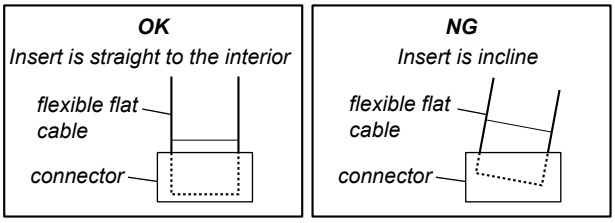

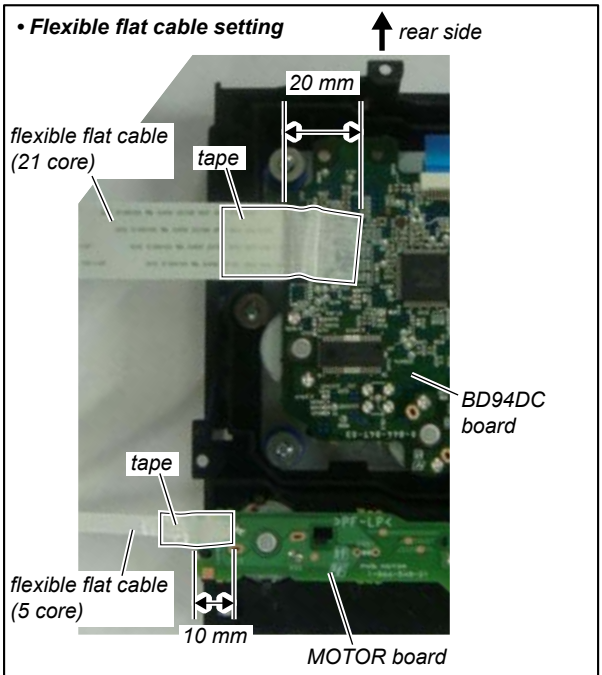

– CD mechanism bottom view –

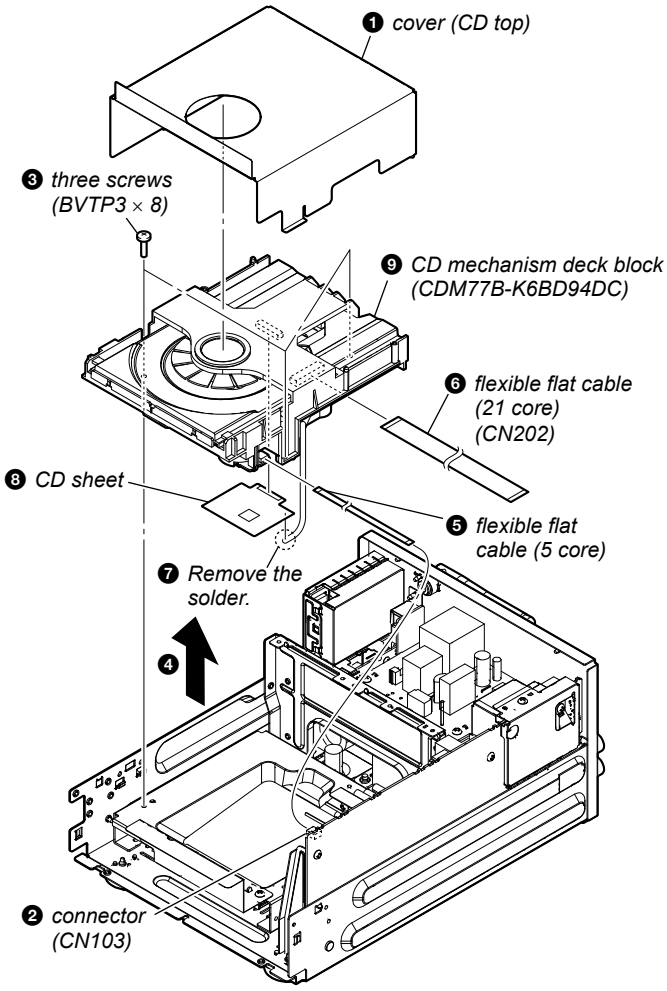

2-14. BELT

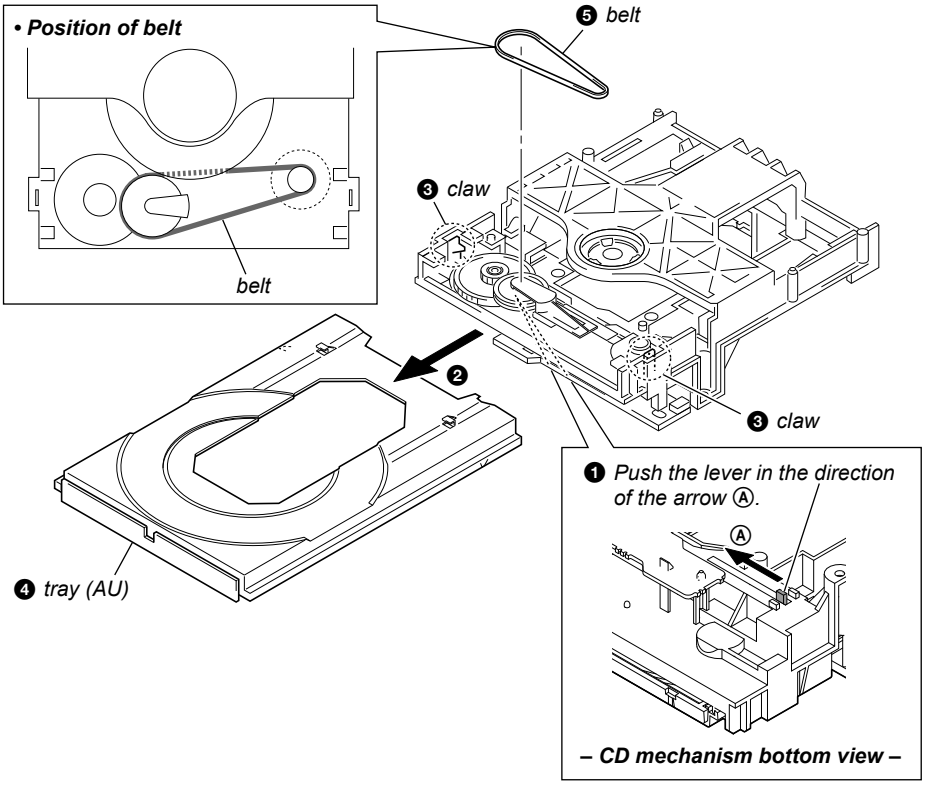

– CD mechanism bottom view –

2-15. BASE UNIT (BU-K6BD94DC)

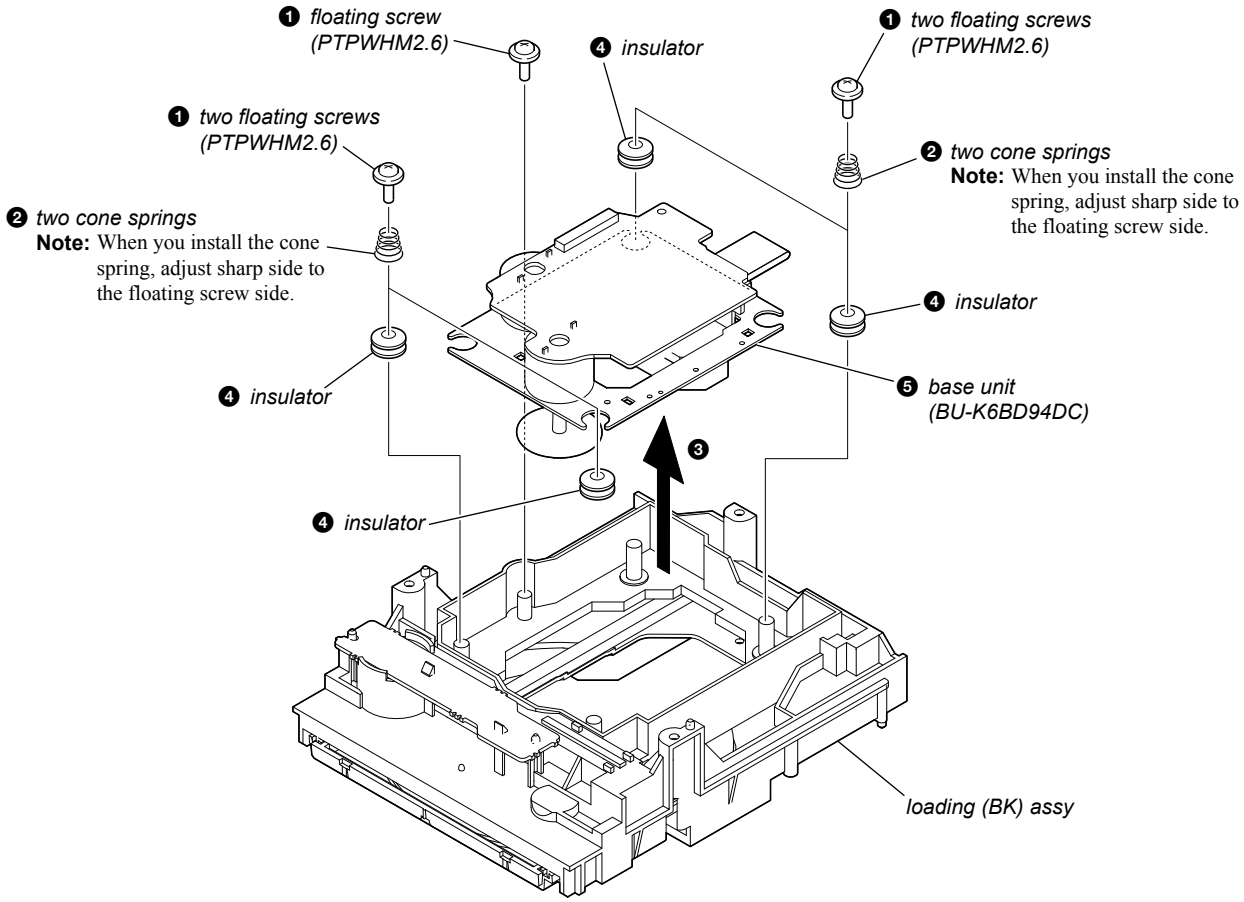

– CD mechanism bottom view –

2-16. OPTICAL PICK-UP BLOCK (KSM-213DCP)

Note 1: When disconnection the wire (flat type) (16 core) of OP base assy, solder the short-land.

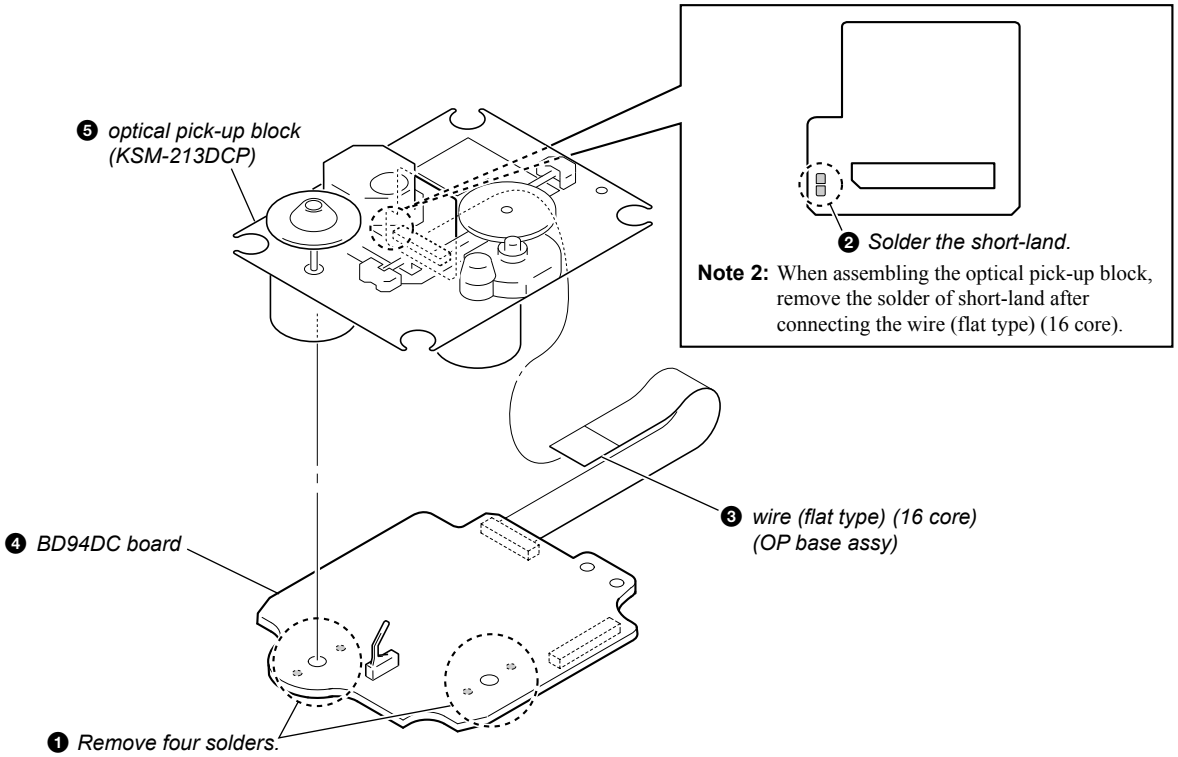

2-17. HOLDER (CD) BLOCK

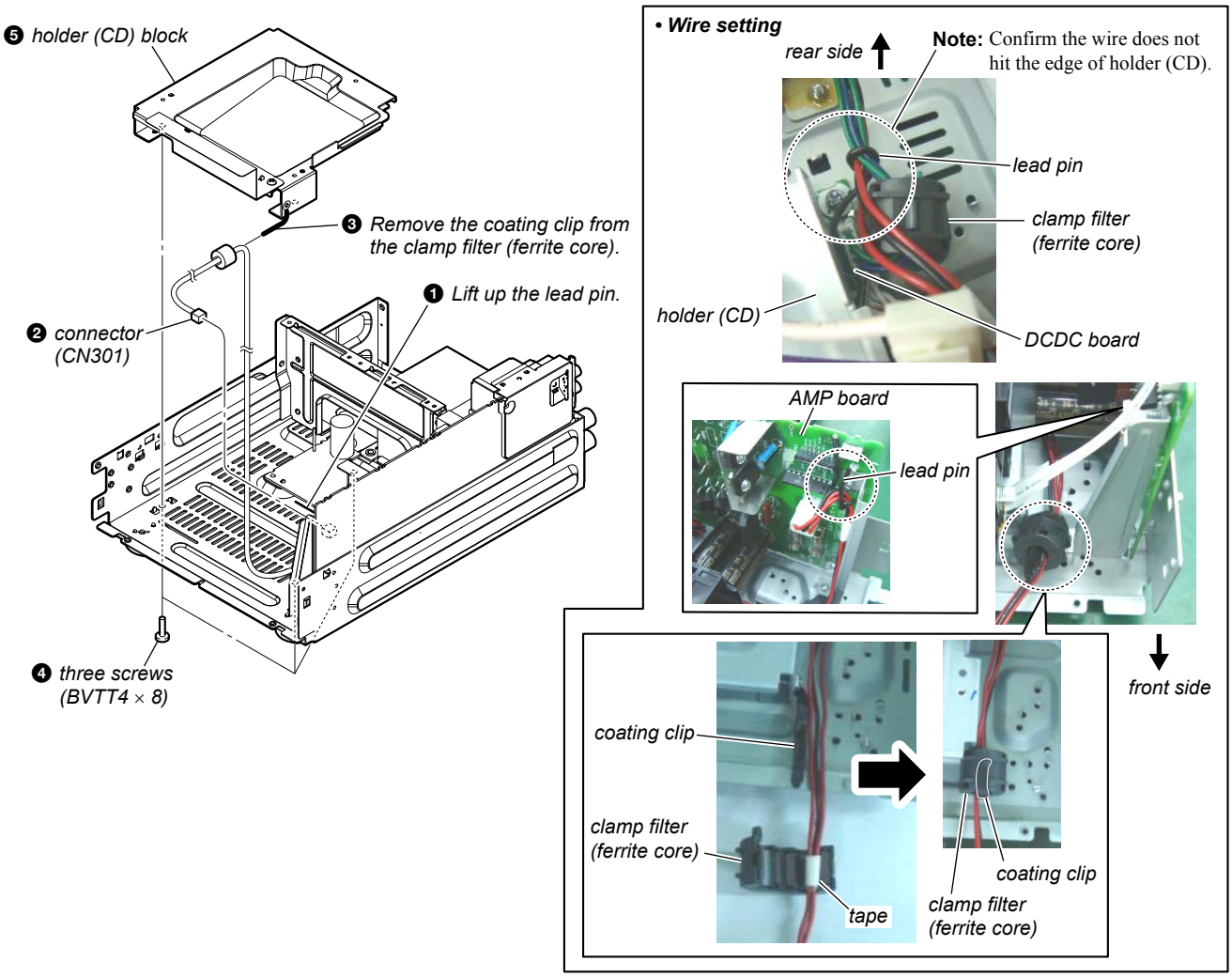

2-18. DCDC BOARD

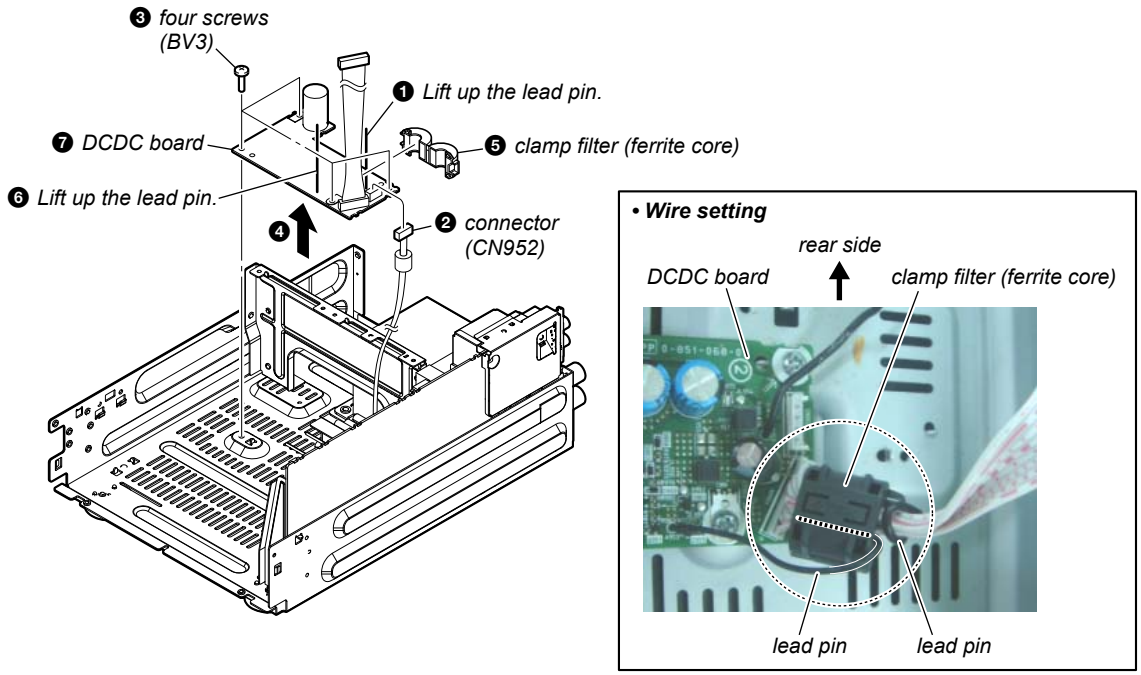

SECTION 3
TEST MODE

COLD RESET

The cold reset clears all data including preset data stored in the memory to initial conditions. Execute this mode when returning the unit to the customer.

Procedure:

1. In the standby status, press the [I/⏻] button to turn the power on.
2. Press two buttons of [■] and [I/⏻] simultaneously for 2 seconds.
3. When "RESET" appears, the unit enters standby status.

AUTO STANDBY MODE

This mode is used to change the automatic standby function.
With this function, the system enters standby mode automatically in about 30 minutes when there is no operation or audio signal output. By default, the automatic standby function is turned on.

Procedure:

1. Press the [I/⏻] button to turn the power on.
2. Press the [I/⏻] button for 2 seconds.
3. The message "AUTO STANDBY OFF" is displayed on the fluorescent indicator tube and the automatic standby OFF mode is set.
4. To turn this function on, press the [I/⏻] button again for 2 seconds.
   The message "AUTO STANDBY ON" is displayed on the fluorescent indicator tube and the automatic standby ON mode is set.

AUTO STANDBY TEST MODE

This mode can confirm the automatic standby function operates normally.

Procedure:

1. Press the [I/⏻] button to turn the power on.
2. Turn the [FUNCTION] knob to select excluding "TUNER".
3. Turn the [VOLUME] knob within 5 seconds after pressing the [⏮ ◀◀ TUNE –] and [I/⏻] buttons simultaneously.
4. The message "STATUS XXX" or "Sig*** XXX" is displayed on the fluorescent indicator tube.
5. When the displayed value decreases and the value becomes "0", the unit becomes standby status. The value doesn't decrease while the audio is reproducing.

Releasing method:

Turn the [VOLUME] knob within 5 seconds after pressing the [⏮ ◀◀ TUNE –] and [I/⏻] buttons simultaneously.

COMMON TEST MODE

This mode is used to check operations of amplifier.

Procedure:

1. Press the [I/⏻] button to turn the power on.
2. Press two buttons of [⏮ ◀◀ TUNE –] and [⏏] simultaneously for 5 seconds.
3. When the COMMON test mode is activated, "AUDIO IN1" is displayed on the fluorescent indicator tube and "SLEEP ◷" blink on the fluorescent indicator tube.
4. Each time the [TONE BASS]/[TONE TREBLE] knobs are turned, or the [EQ] button is pressed on the remote commander, the display changes starting "EQ MAX", "EQ MIN" and "EQ FLAT" this order.
5. Turn the [VOLUME] knob counterclockwise, "VOLUME MIN" is displayed on the fluorescent indicator tube. Turn the [VOLUME] knob clockwise, "VOLUME MAX" is displayed on the fluorescent indicator tube.

Releasing method:

Press the [I/⏻] button to turn off the system.

PANEL TEST MODE

This mode is used to check the fluorescent indicator tube, LED, model, destination, software version and key.

Procedure:

1. Press the [I/⏻] button to turn the power on.
2. Press two buttons of [⏮ ◀◀ TUNE –] and [▶II] simultaneously for 5 seconds.
3. All segments on the fluorescent indicator tube, [STANDBY] LED light up.
4. Press the [⏮ ◀◀ TUNE –] button, the model and destination are displayed on the fluorescent indicator tube.
5. Press the [⏮ ◀◀ TUNE –] button again, MC version is displayed on the fluorescent indicator tube.
6. Each time [⏮ ◀◀ TUNE –] button is pressed, the display changes starting from MCS version, GC version, USBL version, NWA version, NWD version, NWM version, CD version, CDD version, CDMA version, CDMB version, BDA version, BDB version, ST version, TA version and TM version this order, and returns to the MC version display.
7. When [■] button is pressed while the MC version is displayed, year, month and day of the software creation is displayed. When [■] button is pressed again, the display returns to the MC version display.
8. Press the [▶▶ ▷▷⏭ TUNE +] button, the key test mode is activated and "K 0 J0 V0" is displayed on the fluorescent indicator tube.
9. Each time a button is pressed, "K" value increases. However, once a button is pressed, it is no longer taken into account.
   All keys are pressed, display becomes "K10" .
10. "J" value increases 0, 1, 2 ... if turn the [TONE BASS], [TONE TREBLE] or [FUNCTION] knobs clockwise, or it decreases 9, 8, 7 ... if turn the knob counterclockwise.
11. "V" value increases 2, 4, 6 ... if turn the [VOLUME] knob clockwise, or it decreases 8, 6, 4 ... if turn the knob counterclockwise.

Releasing method:

Press two buttons of [⏮ ◀◀ TUNE –] and [▶II] simultaneously, or disconnect the power cord.

CD SHIP MODE

This mode moves the optical pick-up to the position durable to vibration. Use this mode when returning the set to the customer after repair.

Procedure:

1. Press the [I/⏻] button to turn the power on.
2. Turn the [FUNCTION] knob to select "CD".
3. Press the [⏏] button for 5 seconds.
4. After blink "STANDBY", "LOCK" is displayed, disconnect the power cord.

CD SHIP MODE & COLD RESET

This mode is used to perform CD ship mode and cold reset simultaneously.

Procedure:

1. Press the [I/⏻] button to turn the power on.
2. Press two buttons of [▶▶ ▷▷⏭ TUNE +] and [⏏] simultaneously for 5 seconds.
3. After blink "STANDBY", "LOCK" is displayed, disconnect the power cord.

SECTION 4
ELECTRICAL CHECK

DISC TRAY LOCK MODE

This mode is used to unable to take sample disc out of disc tray in the shop.

Procedure:

1. Press the [I/⏻] button to turn the power on.
2. Press the [⏏] button to open the disc tray and set the CD.
3. Press the [⏏] button to close the disc tray.
4. Press two buttons of [■] and [⏏] for 5 seconds.
5. The message "LOCKED" is displayed on the fluorescent indicator tube and the disc tray is locked. (Even if pressing the [⏏] button, the message "LOCKED" is displayed on the fluorescent indicator tube and the disc tray is locked)

Releasing method:

1. Press two buttons of [■] and [⏏] for 5 seconds.
2. The message "UNLOCKED" is displayed on the fluorescent indicator tube and the disc tray is unlocked.

CD SERVICE MODE

This mode can run the CD sled motor freely. Use this mode, for instance, when cleaning the optical pick-up.

Procedure:

1. Press the [I/⏻] button to turn the power on.
2. Turn the [FUNCTION] knob to select "CD".
3. Press two buttons of [▶▶ ⊳⊳I TUNE +] and [▶II] simultaneously for 5 seconds, the message "SERVICE MODE" is displayed on the fluorescent indicator tube.
4. Press the [I⊲⊲ ◀◀ TUNE –] button to move the optical pick-up to inside track and the message "SLED IN" is displayed on the fluorescent indicator tube, or press the [▶▶ ⊳⊳I TUNE +] button to outside track and the message "SLED OUT" is displayed on the fluorescent indicator tube.
5. Press the [▶II] button, "LD ON" or "LD OFF" is displayed on the fluorescent indicator tube. Each time [▶II] button is pressed, laser diode on/off is changed over.

Releasing method:

Press the [I/⏻] button to turn off the system.

CHANGE-OVER THE AM TUNING INTERVAL (G2BNiP: Australisn model)

The AM tuning interval can be changed over 9 kHz or 10 kHz.

Procedure:

1. Press the [I/⏻] button to turn the power on.
2. Turn the [FUNCTION] knob to select TUNER AM function.
3. Press the [I/⏻] button again to turn the power off (standby).
4. After pressing the [DISPLAY] button on the remote commander, while pressing the [▶▶ ⊳⊳I TUNE +] button, press the [I/⏻] button.
5. It turns power on and display "9k STEP" or "10k STEP", and thus the tuning interval is changed over.

FM TUNE LEVEL CHECK

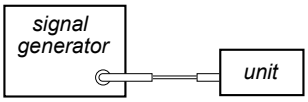

Procedure:

1. Turn on the unit.
2. Input the following signal from signal generator to FM antenna input directly.

Carrier frequency : A = 87.5 MHz, B = 98 MHz, C = 108 MHz
Deviation : 75 kHz
Modulation : 1 kHz
ANT input : 35 dBu (EMF)

Note: Use 75 ohm coaxial cable to connect signal generator and the set. You cannot use video cable for checking. Use signal generator whose output impedance is 75 ohm.

3. Set to FM tuner function and tune A, B and C signals.
4. Confirm "TUNED" is lit on the display for A, B and C signals.

When the selected station signal is received in good condition, "TUNED" is displayed.

SECTION 5
DIAGRAMS

5-1. BLOCK DIAGRAM - CD/USB/PANEL Section -

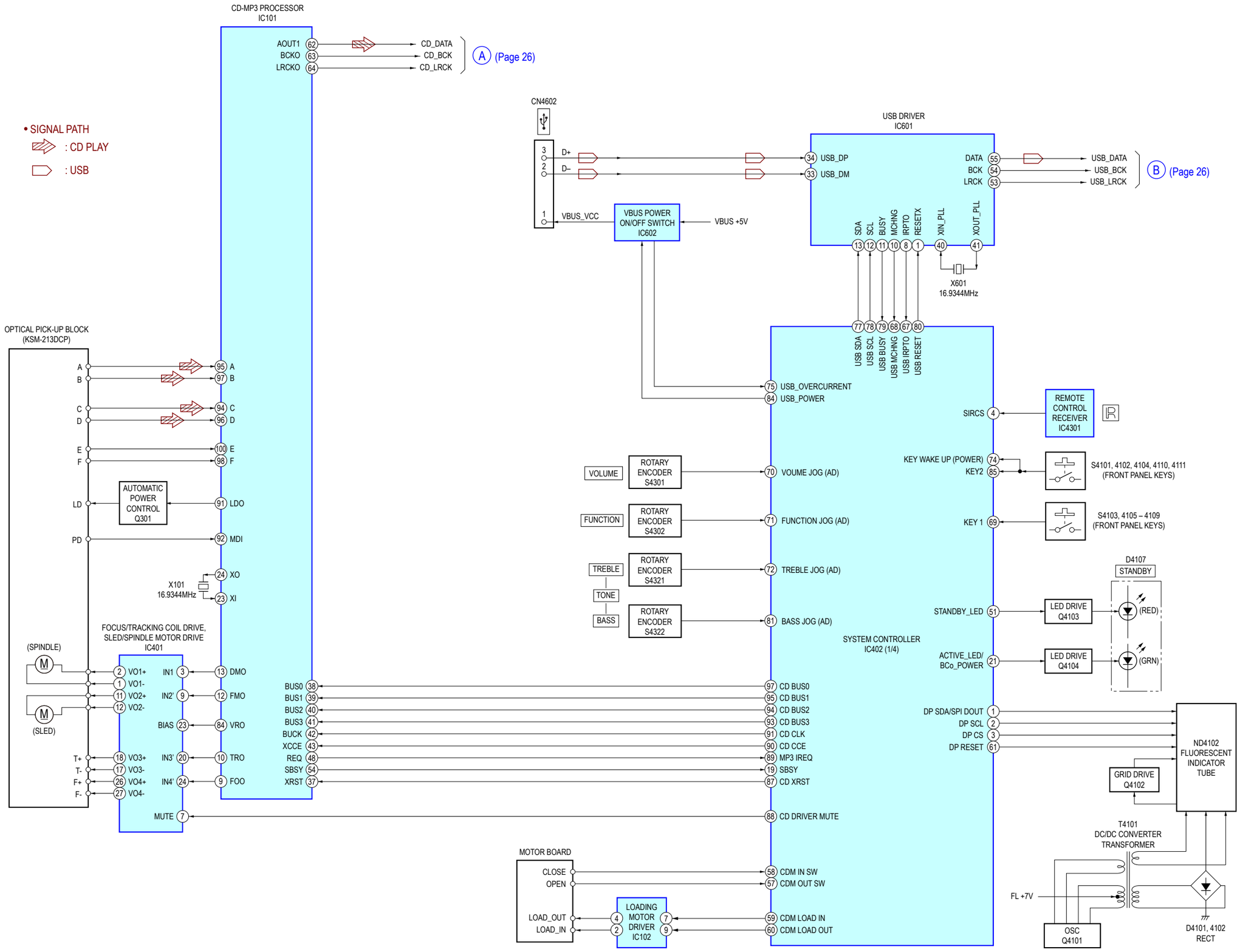

5-2. BLOCK DIAGRAM - TUNER/NETWORK Section -

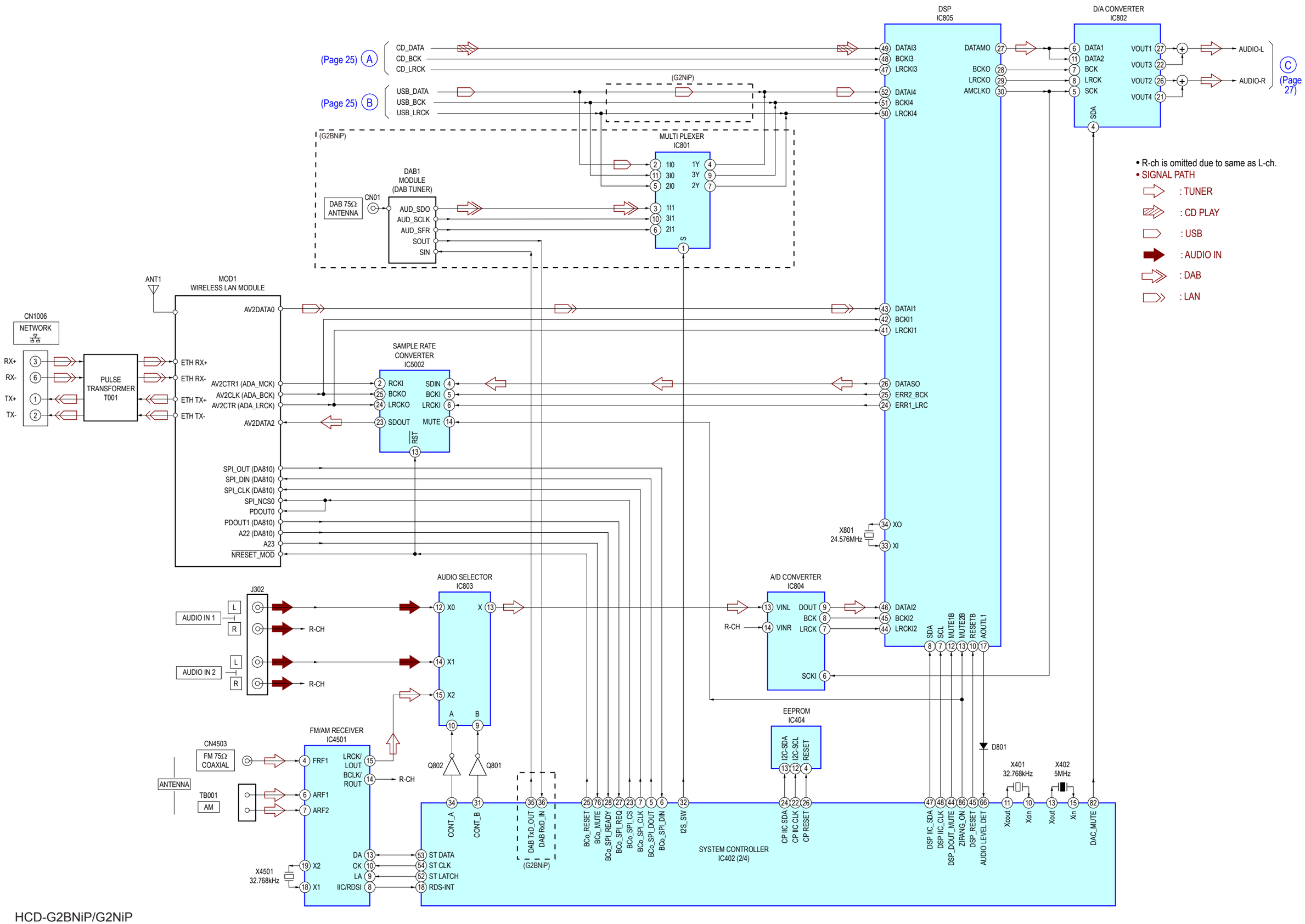

5-3. BLOCK DIAGRAM - AMP Section -

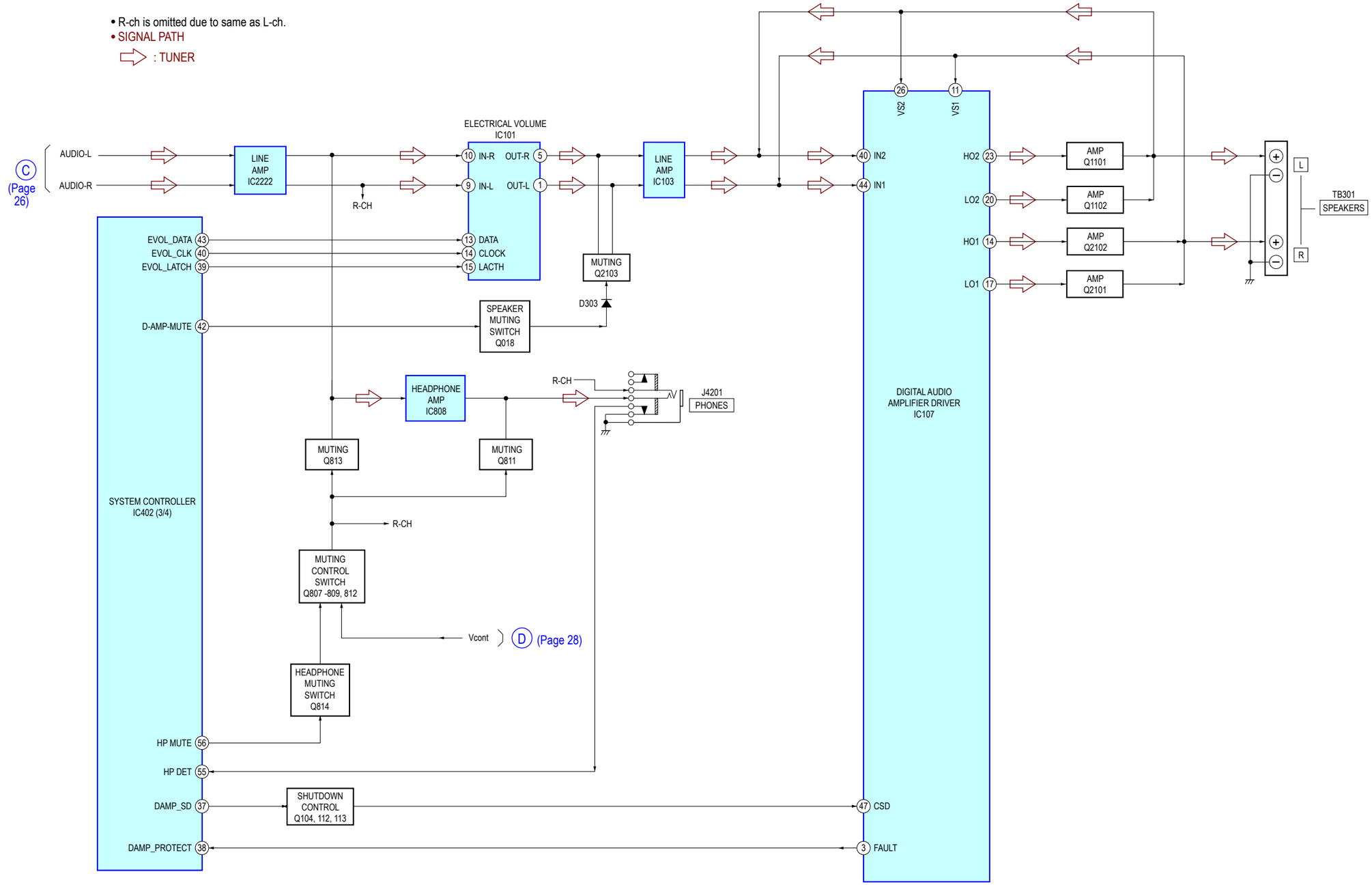

5-4. BLOCK DIAGRAM - POWER SUPPLY Section -

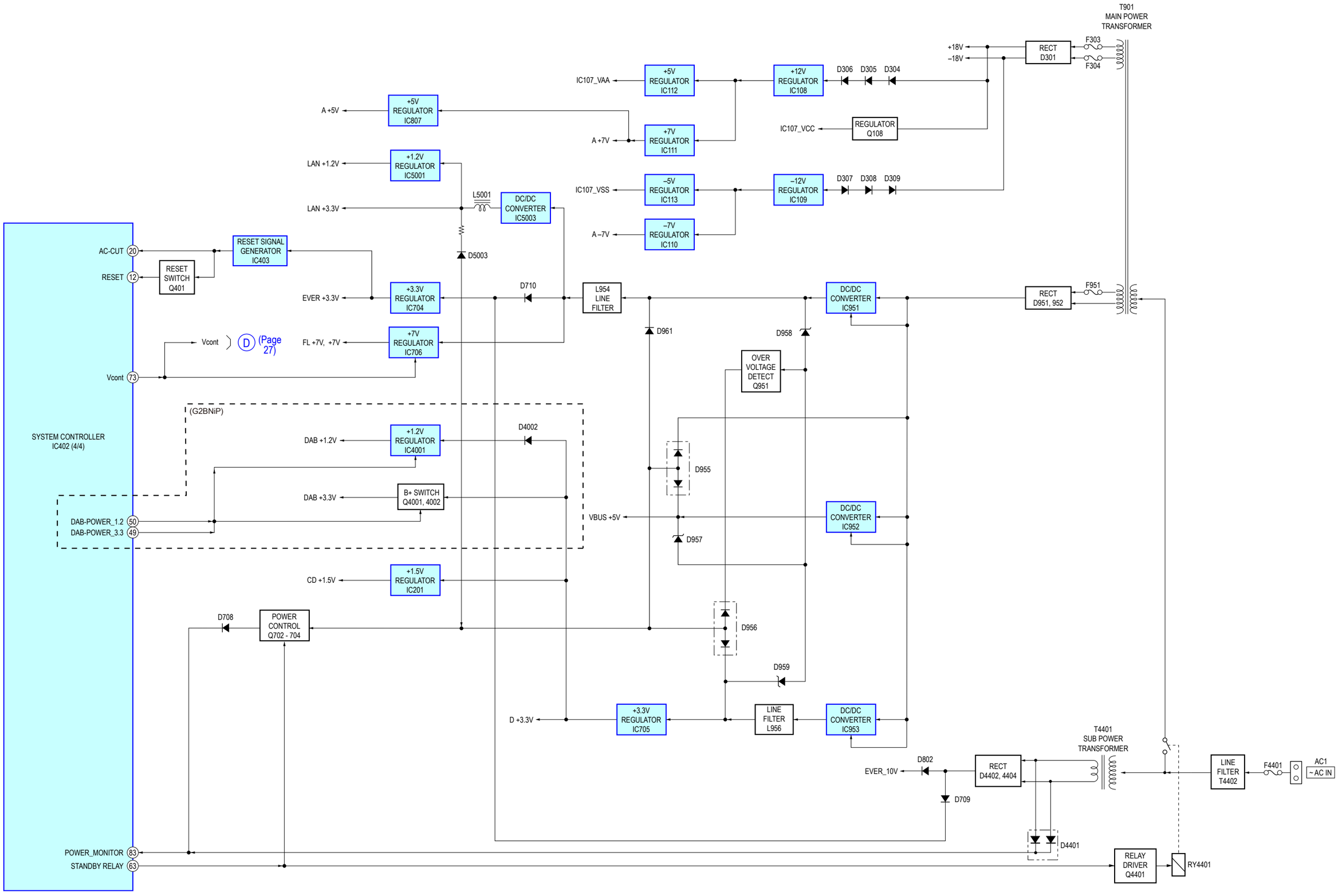

THIS NOTE IS COMMON FOR PRINTED WIRING BOARDS AND SCHEMATIC DIAGRAMS.
(In addition to this, the necessary note is printed in each block.)

For Printed Wiring Boards.

Note:

- ○——: Parts extracted from the component side.
- ——: Parts extracted from the conductor side.
- △ : Internal component.
- ▭ : Pattern from the side which enables seeing. (The other layers' patterns are not indicated.)

Caution:	
Pattern face side: (Conductor Side)	Parts on the pattern face side seen from the pattern face are indicated.
Parts face side: (Component Side)	Parts on the parts face side seen from the parts face are indicated.

Caution:	
Pattern face side: (SIDE B)	Parts on the pattern face side seen from the pattern face are indicated.
Parts face side: (SIDE A)	Parts on the parts face side seen from the parts face are indicated.

- MAIN board is multi-layer printed board. However, the patterns of intermediate-layers have not been included in this diagrams.
- Indication of transistor.

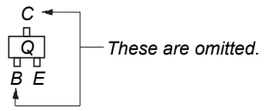

- Abbreviation
  AUS : Australian model
- Lead layouts

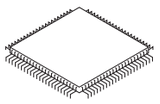

Lead layout of conventional IC

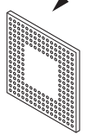

CSP (Chip Size Package)

For Schematic Diagrams.

Note:

- All capacitors are in μF unless otherwise noted. (p: pF) 50 WV or less are not indicated except for electrolytics and tantalums.
- All resistors are in Ω and 1/4 W or less unless otherwise specified.
- △ : Internal component.
- ▭ : Nonflammable resistor.
- ▭ : Panel designation.

Note: The components identified by mark ⚠ or dotted line with mark ⚠ are critical for safety. Replace only with part number specified.

- ▬▬ : B+ Line.
- ▬ ▬ ▬ : B– Line.
- Voltages and waveforms are dc with respect to ground under no-signal (detuned) conditions.

– BD94DC Board –
no mark: CD PLAY
– Other Boards –
no mark: TUNER FM
( ): CD PLAY
< >: TUNER DAB

- Voltages are taken with VOM (Input impedance 10 MΩ). Voltage variations may be noted due to normal production tolerances.
- Waveforms are taken with a oscilloscope. Voltage variations may be noted due to normal production tolerances.
- Circled numbers refer to waveforms.
- Signal path.
  ⇨ : TUNER
  ⇨ : CD PLAY
  ▭ : USB
  ➡ : AUDIO IN
  ⇨ : DAB
  ▭ : LAN
- Abbreviation
  AUS : Australian model
- The voltage and waveform of CSP (chip size package) cannot be measured, because its lead layout is different from that of conventional IC.

- **Circuit Boards Location.**

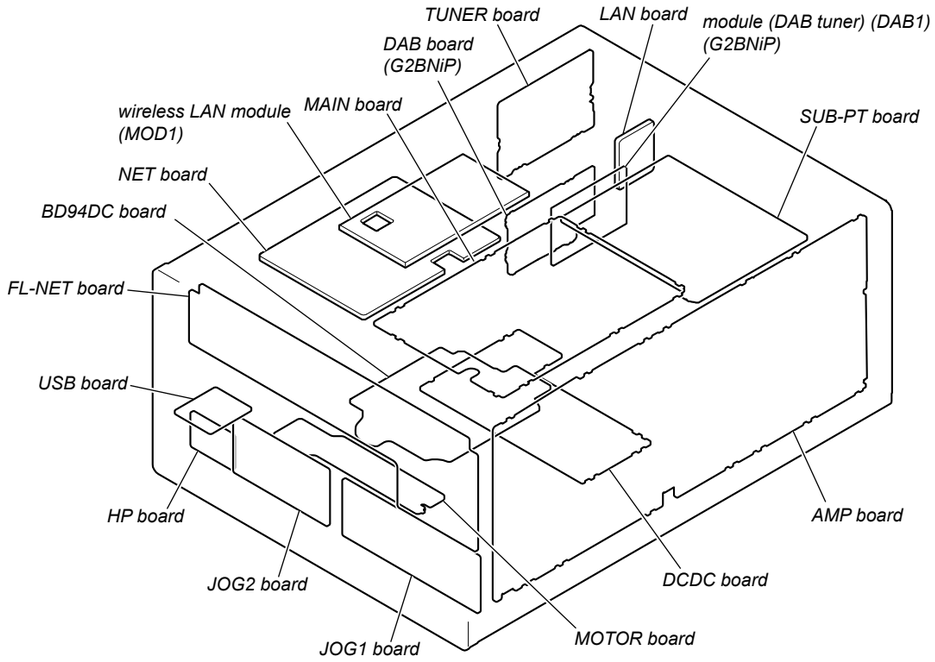

5-5. PRINTED WIRING BOARD - BD94DC Board -

• See page 29 for Circuit Boards Location. • : Uses unleaded solder.

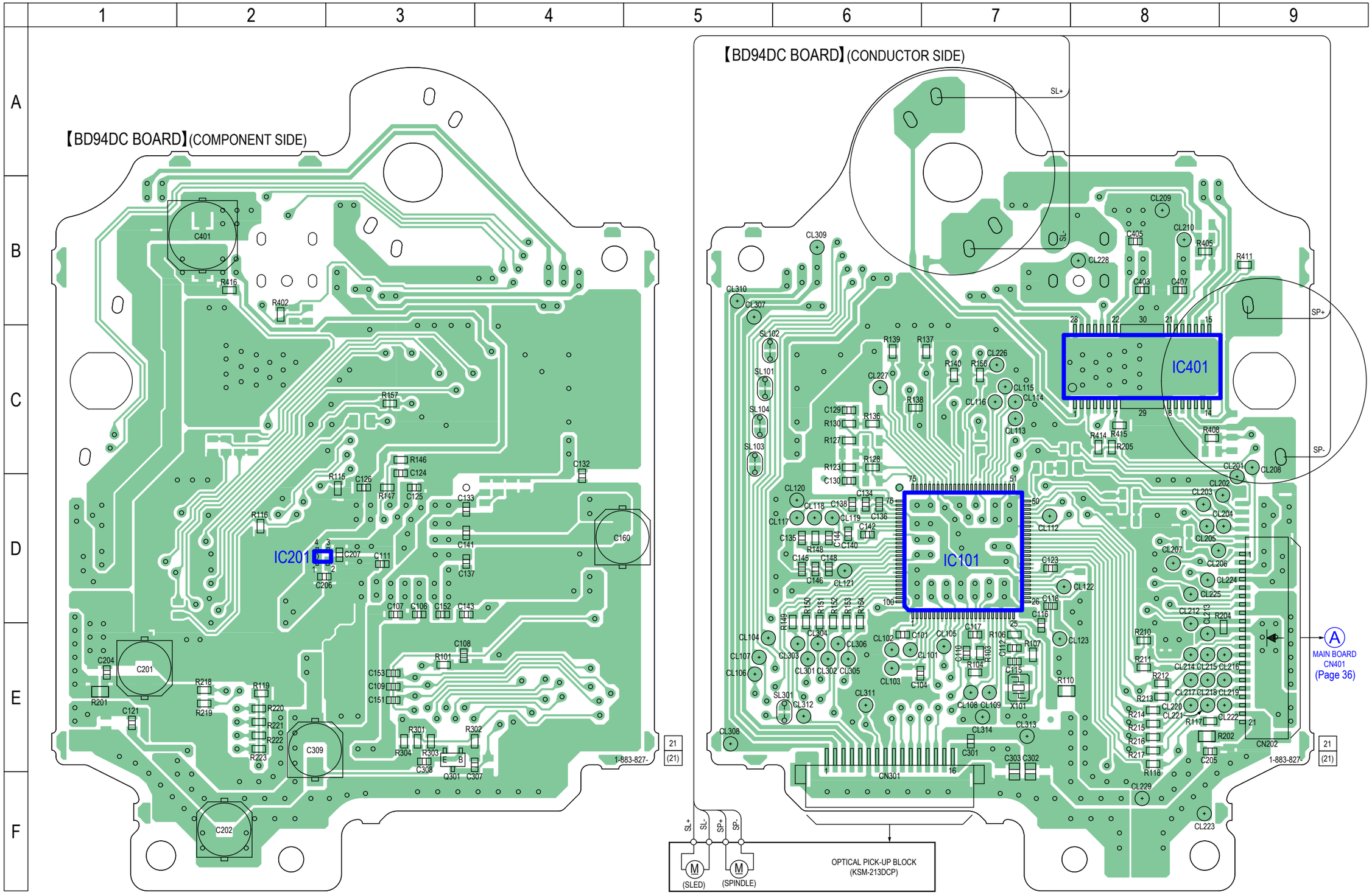

5-6. SCHEMATIC DIAGRAM - BD94DC Board -

• See page 50 for Waveforms. • See page 51 for IC Block Diagrams. • See page 56 for IC Pin Function Description.

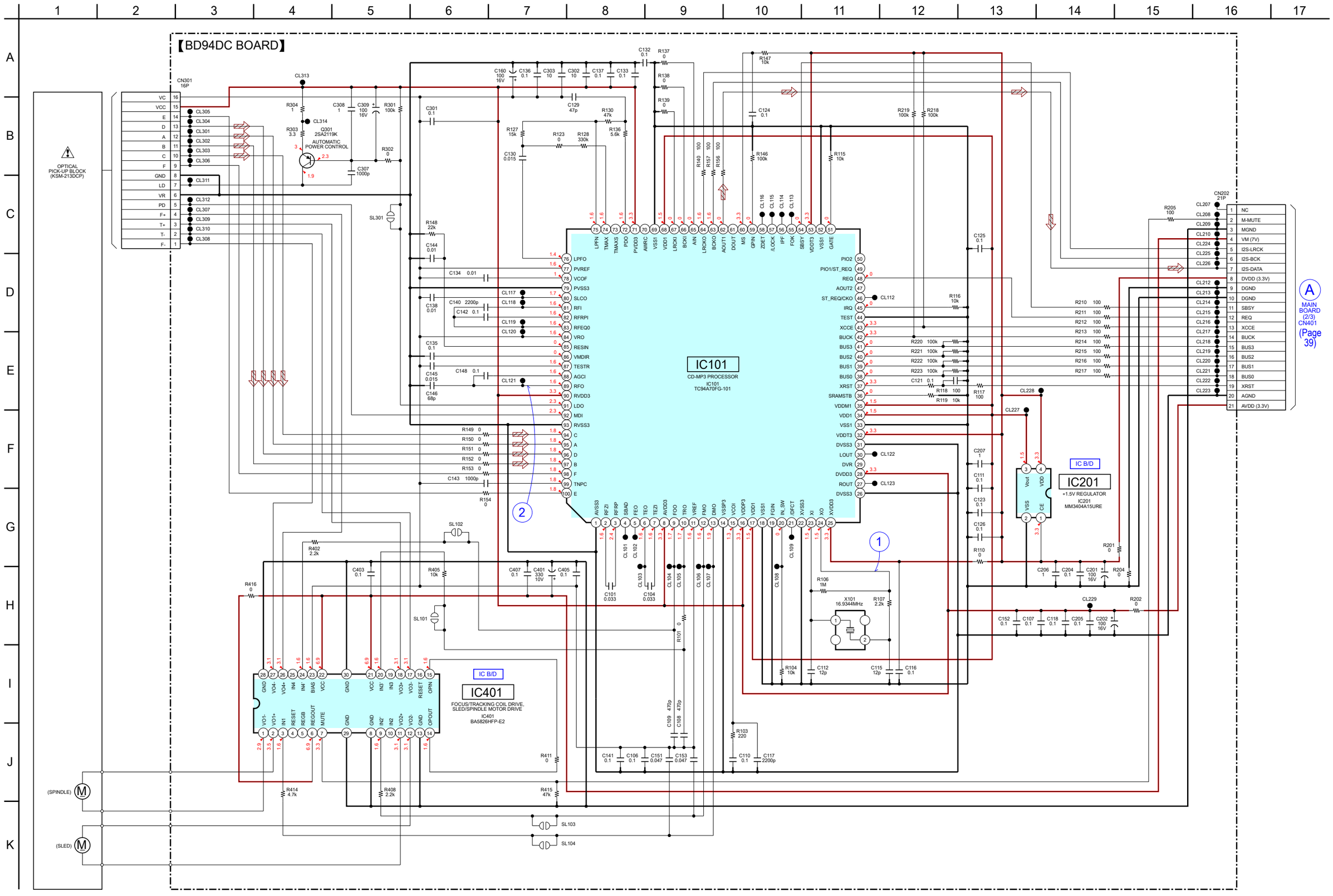

5-7. PRINTED WIRING BOARD - TUNER Board -

• See page 29 for Circuit Boards Location. • : Uses unleaded solder.

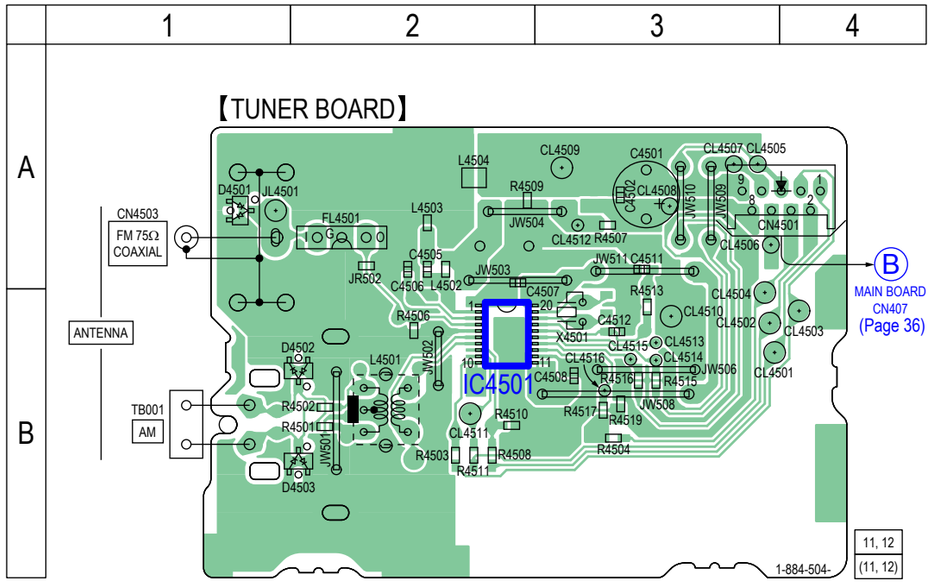

5-8. SCHEMATIC DIAGRAM - TUNER Board -

• See page 50 for Waveforms. • See page 51 for IC Block Diagrams.

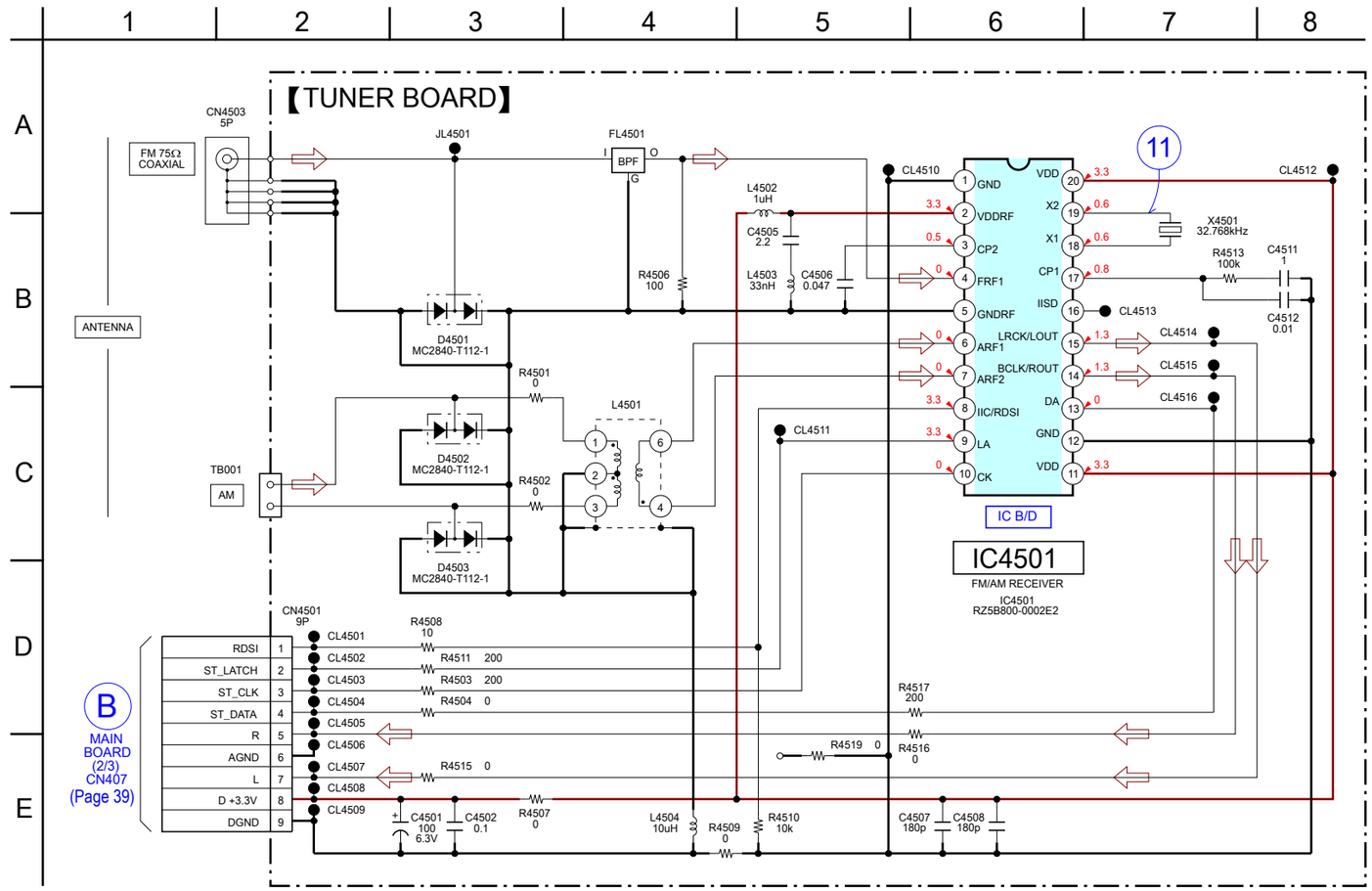

5-9. PRINTED WIRING BOARD - DAB Board (G2BNiP) -

• See page 29 for Circuit Boards Location. • : Uses unleaded solder.

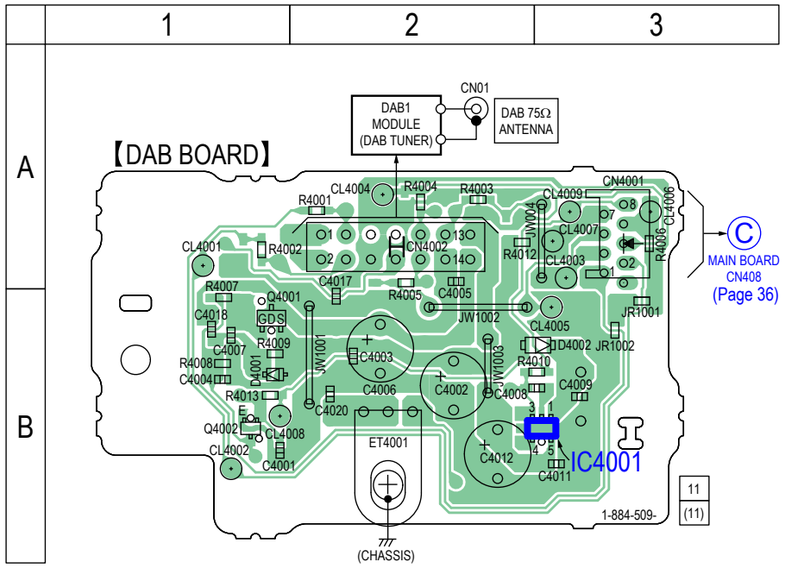

5-10. SCHEMATIC DIAGRAM - DAB Board (G2BNiP) - • See page 51 for IC Block Diagrams.

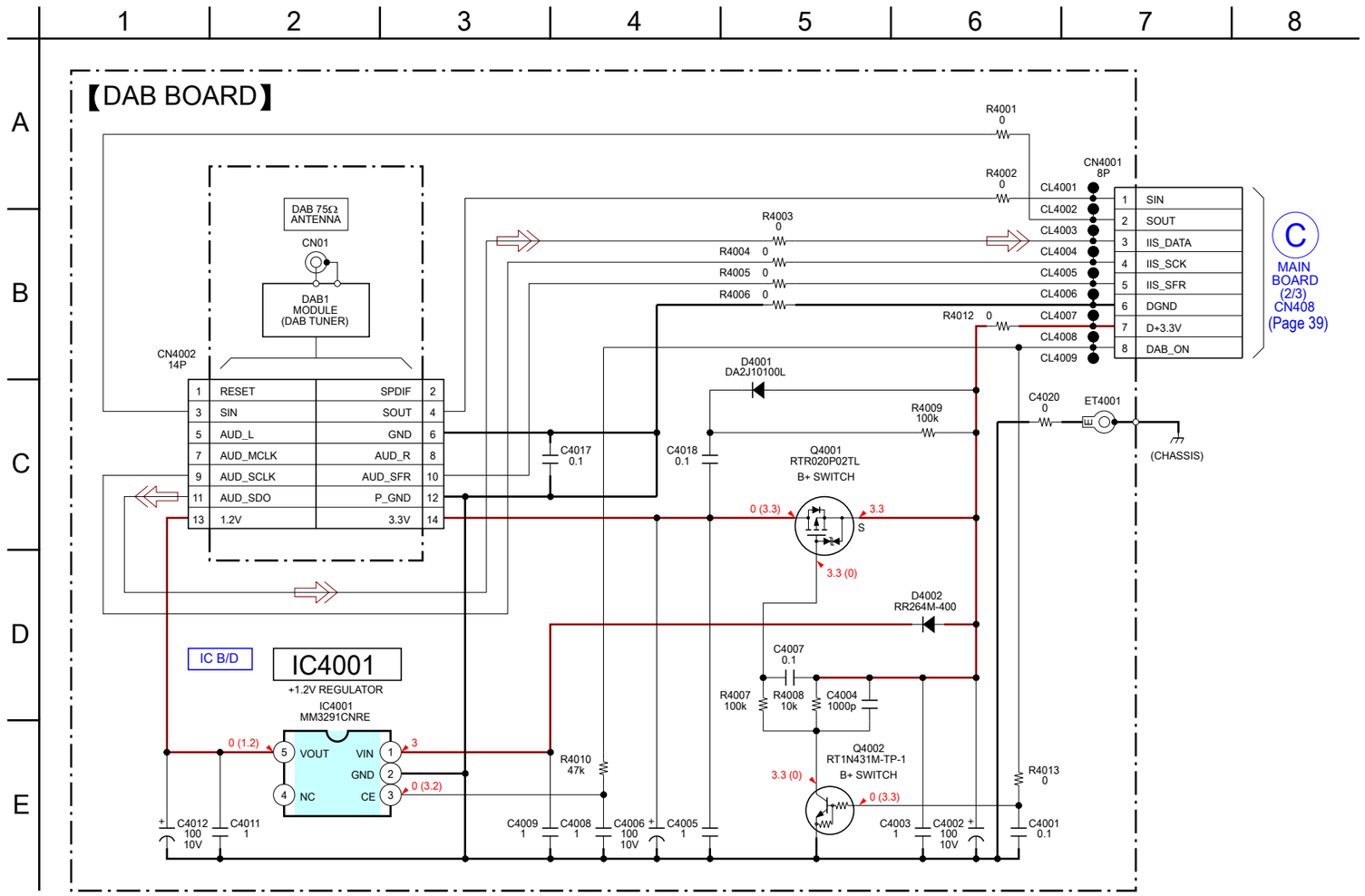

5-11. PRINTED WIRING BOARDS - NETWORK Section -

• See page 29 for Circuit Boards Location. • : Uses unleaded solder.

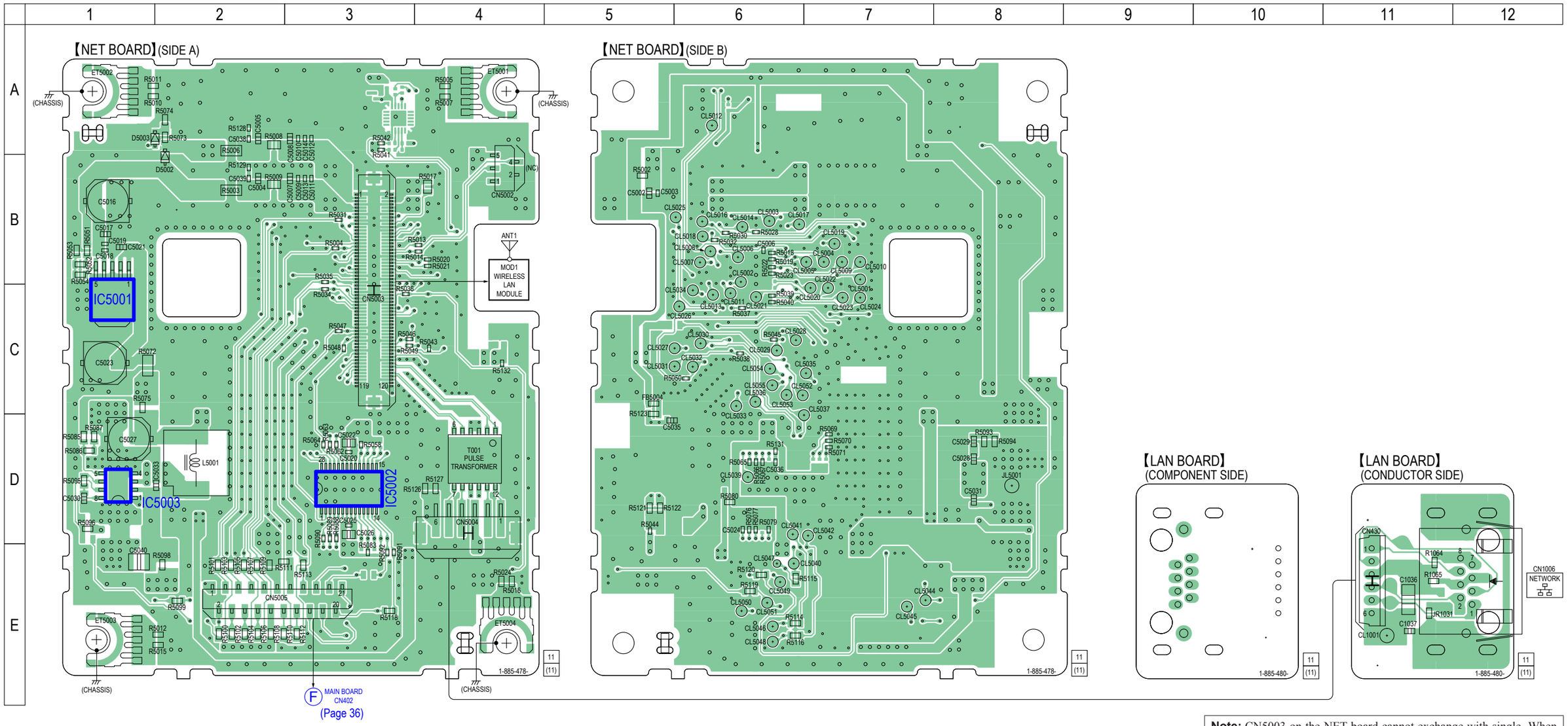

Note: CN5003 on the NET board cannot exchange with single. When this part is damaged, exchange the complete mounted board.

5-12. SCHEMATIC DIAGRAM - NETWORK Section -

• See page 50 for Waveforms. • See page 51 for IC Block Diagrams.

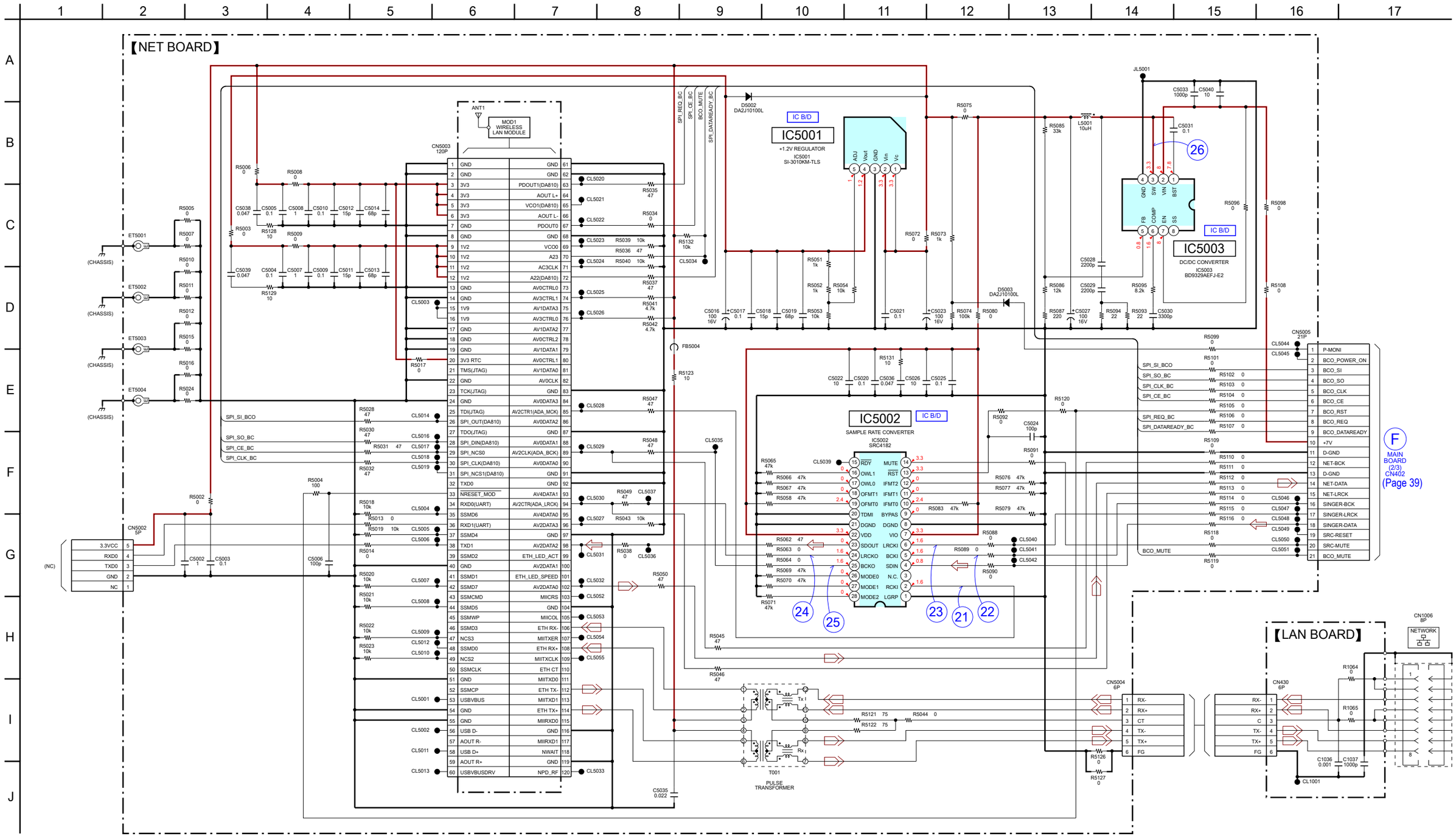

Note: CN5003 on the NET board cannot exchange with single. When this part is damaged, exchange the complete mounted board.

5-13. PRINTED WIRING BOARD - MAIN Board (Side A) -

• See page 29 for Circuit Boards Location. • : Uses unleaded solder.

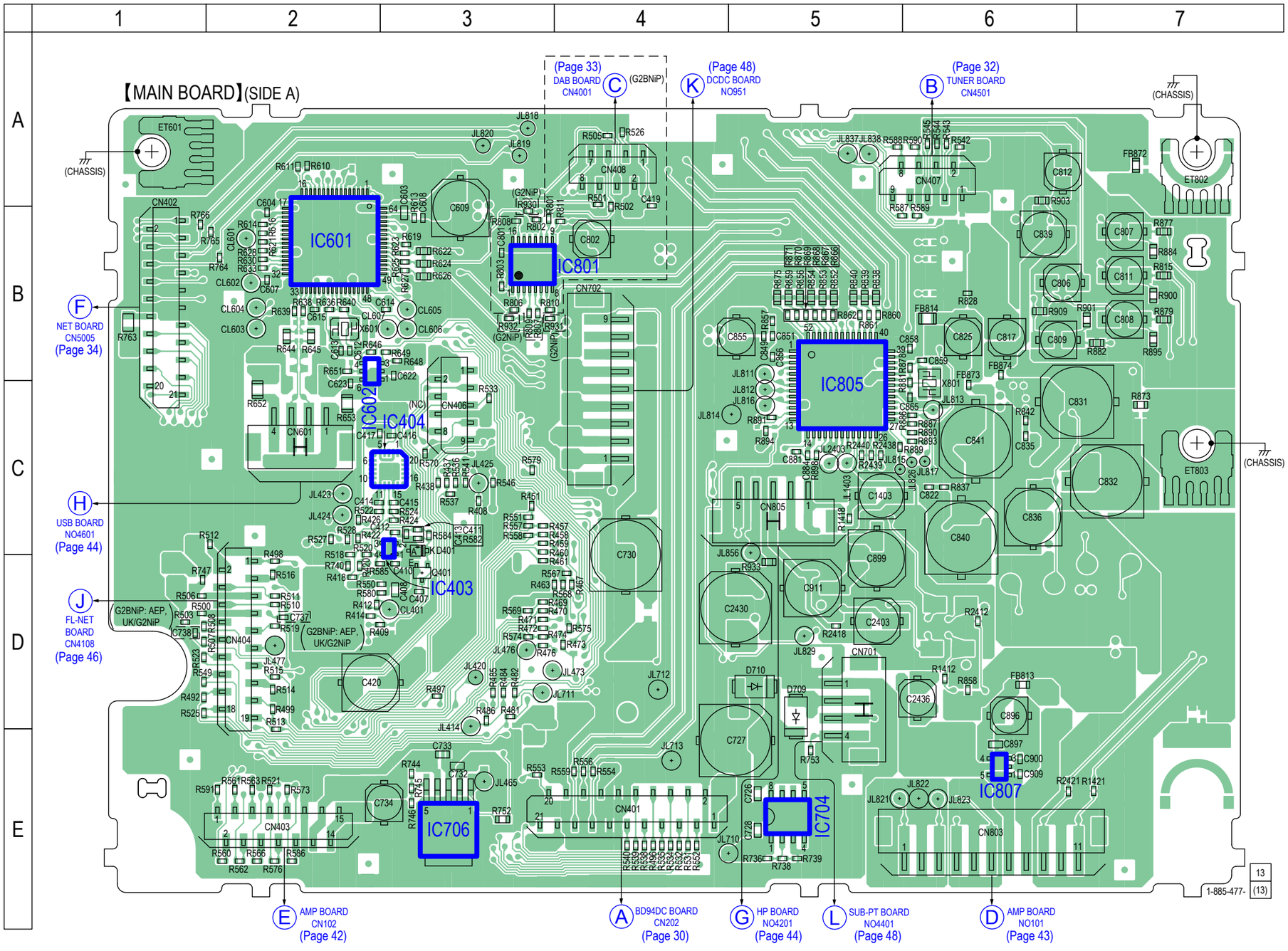

5-14. PRINTED WIRING BOARD - MAIN Board (Side B) -

• See page 29 for Circuit Boards Location. • : Uses unleaded solder.

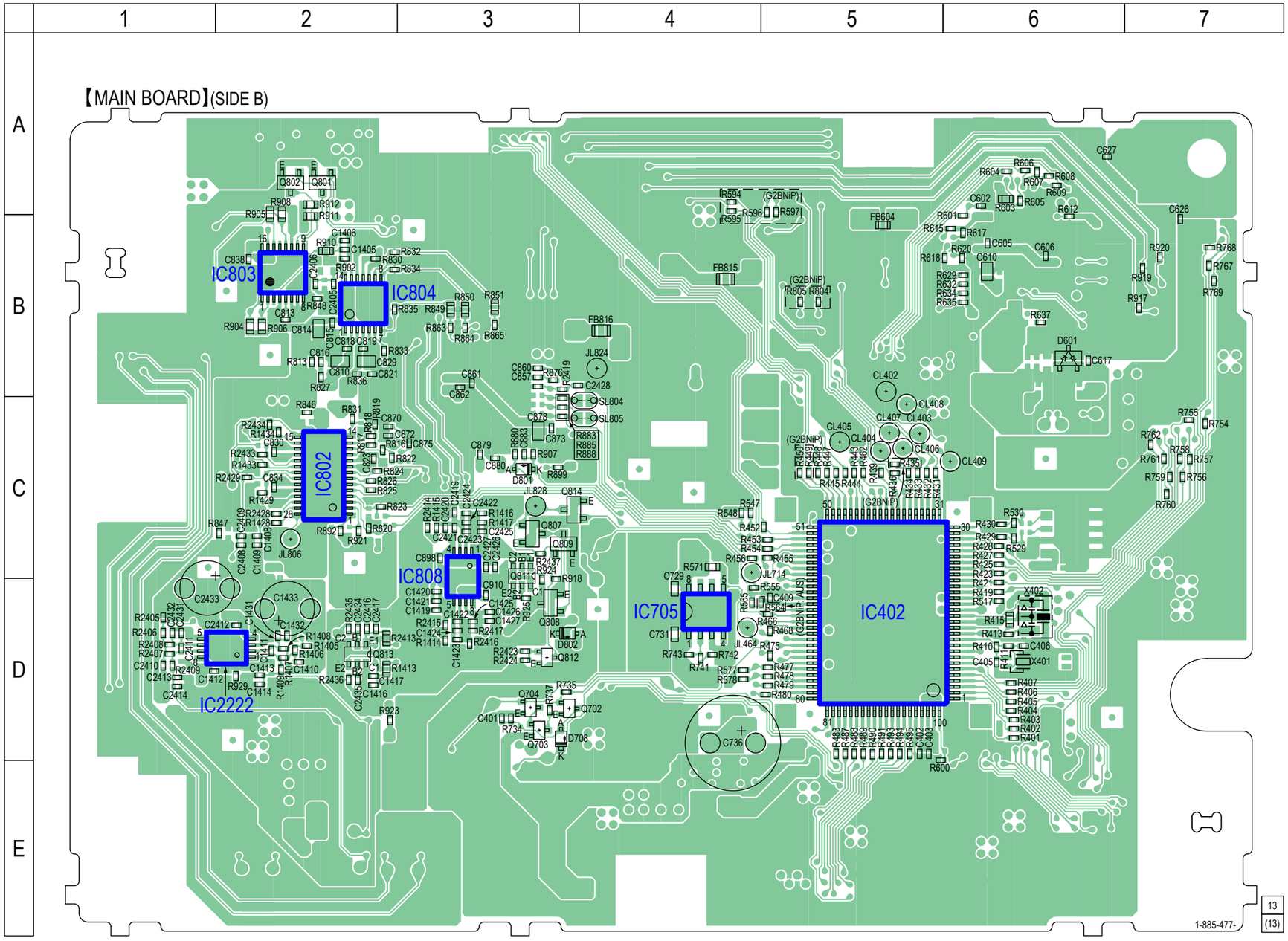

5-15. SCHEMATIC DIAGRAM - MAIN Board (1/3) -

• See page 50 for Waveforms. • See page 51 for IC Block Diagrams. • See page 56 for IC Pin Function Description.

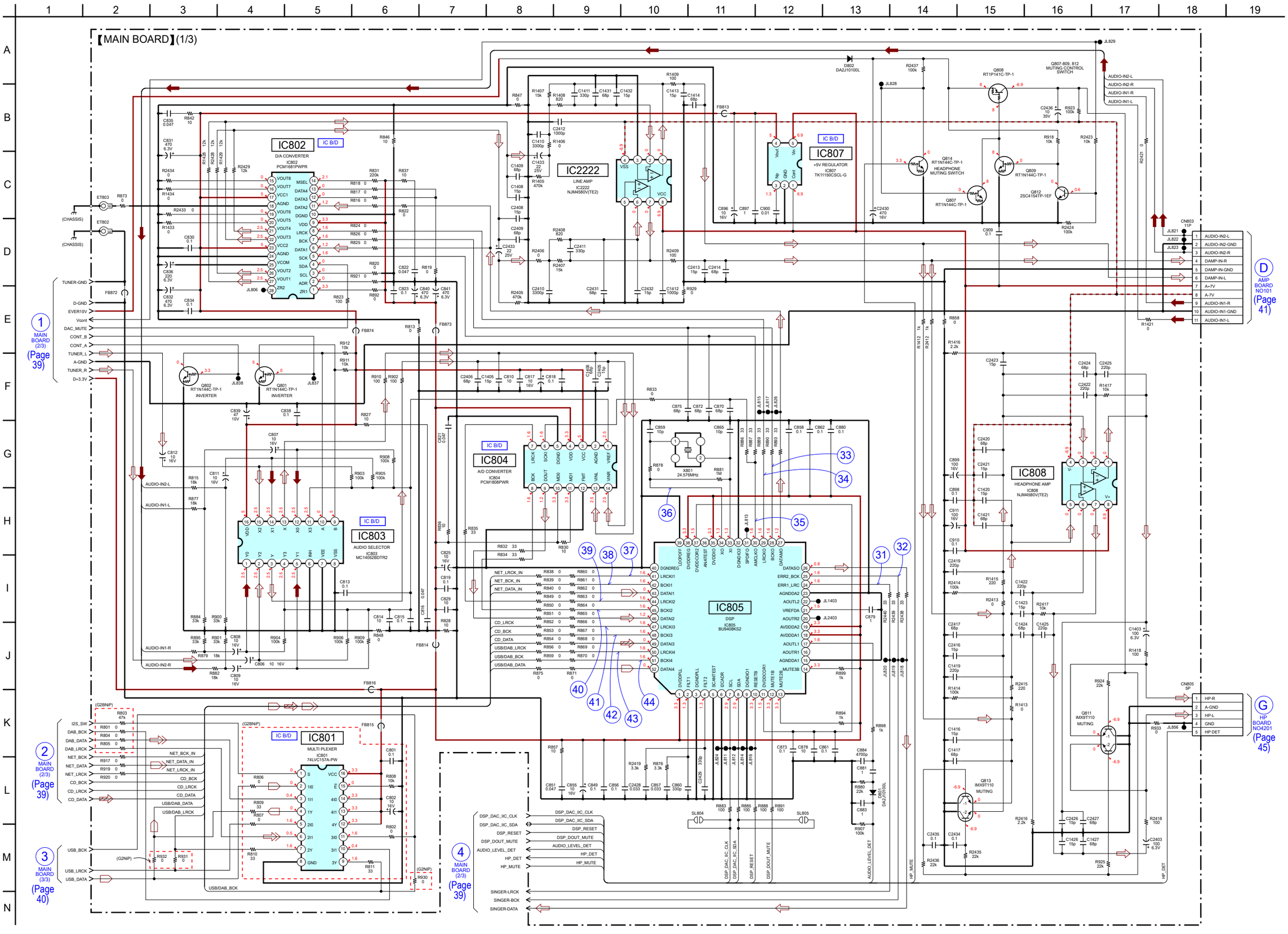

5-16. SCHEMATIC DIAGRAM - MAIN Board (2/3) -

• See page 50 for Waveforms. • See page 51 for IC Block Diagrams. • See page 56 for IC Pin Function Description.

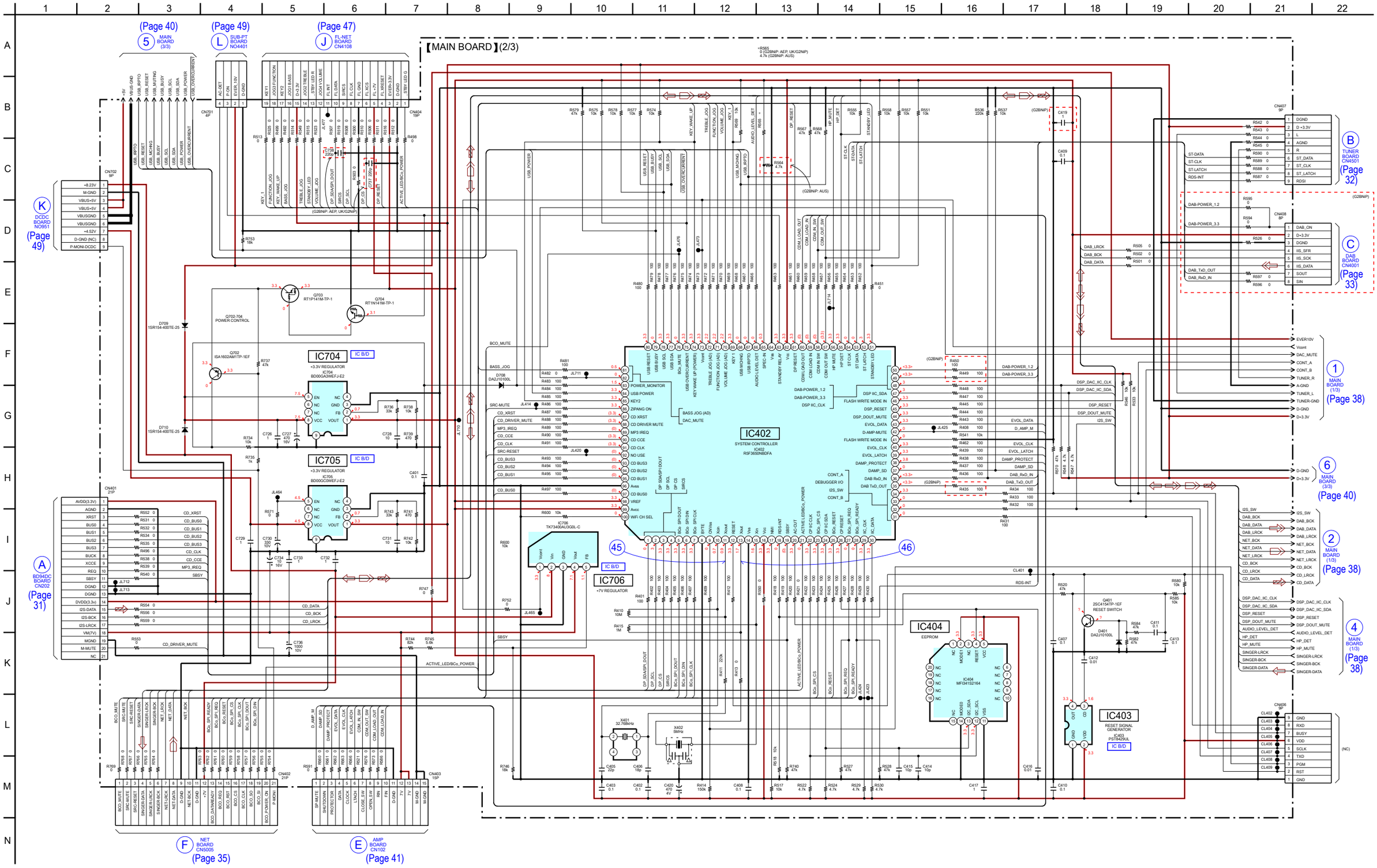

5-17. SCHEMATIC DIAGRAM - MAIN Board (3/3) -

• See page 50 for Waveforms. • See page 51 for IC Block Diagrams. • See page 56 for IC Pin Function Description.

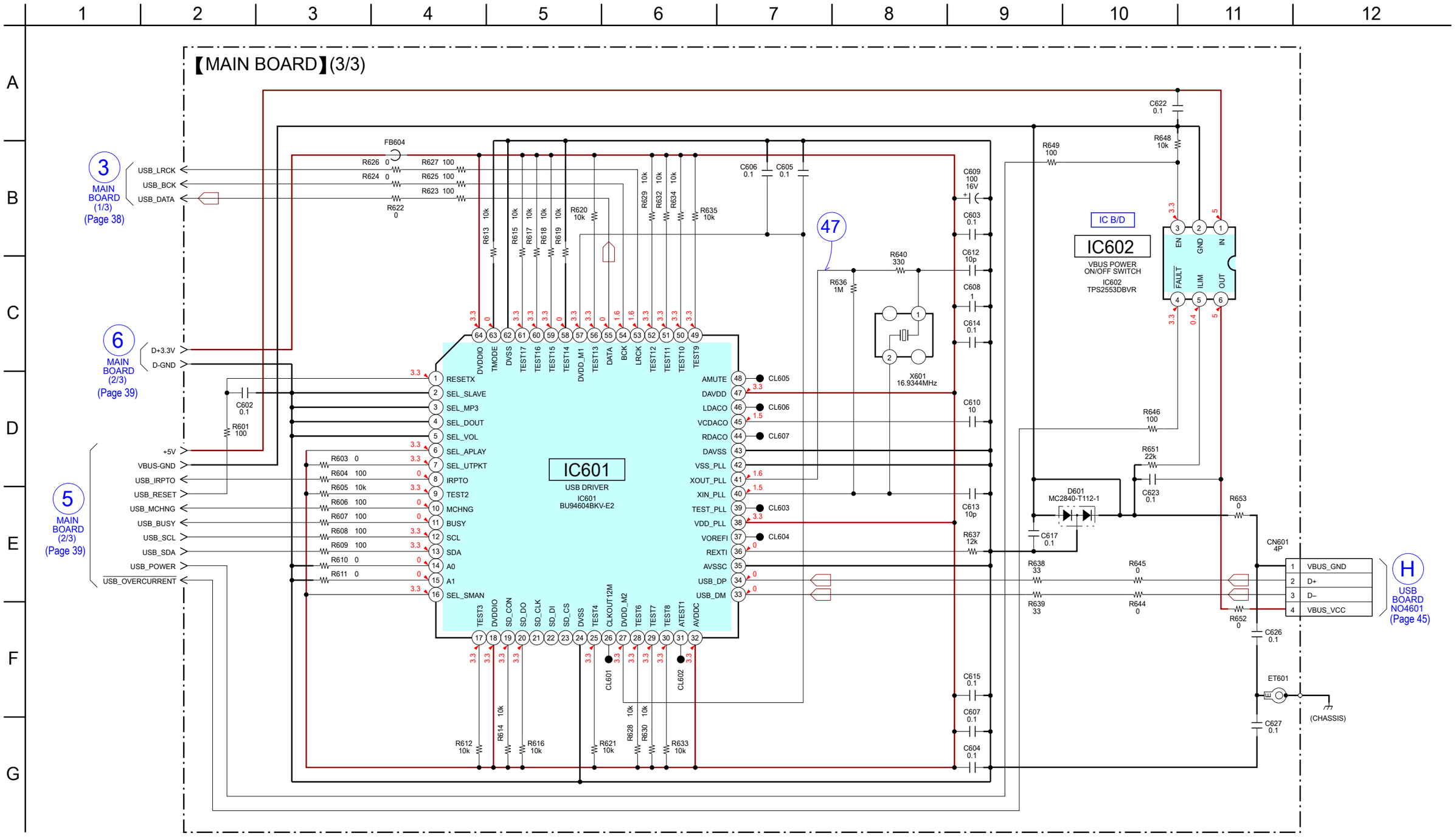

5-18. SCHEMATIC DIAGRAM - AMP Section - • See page 51 for IC Block Diagrams.

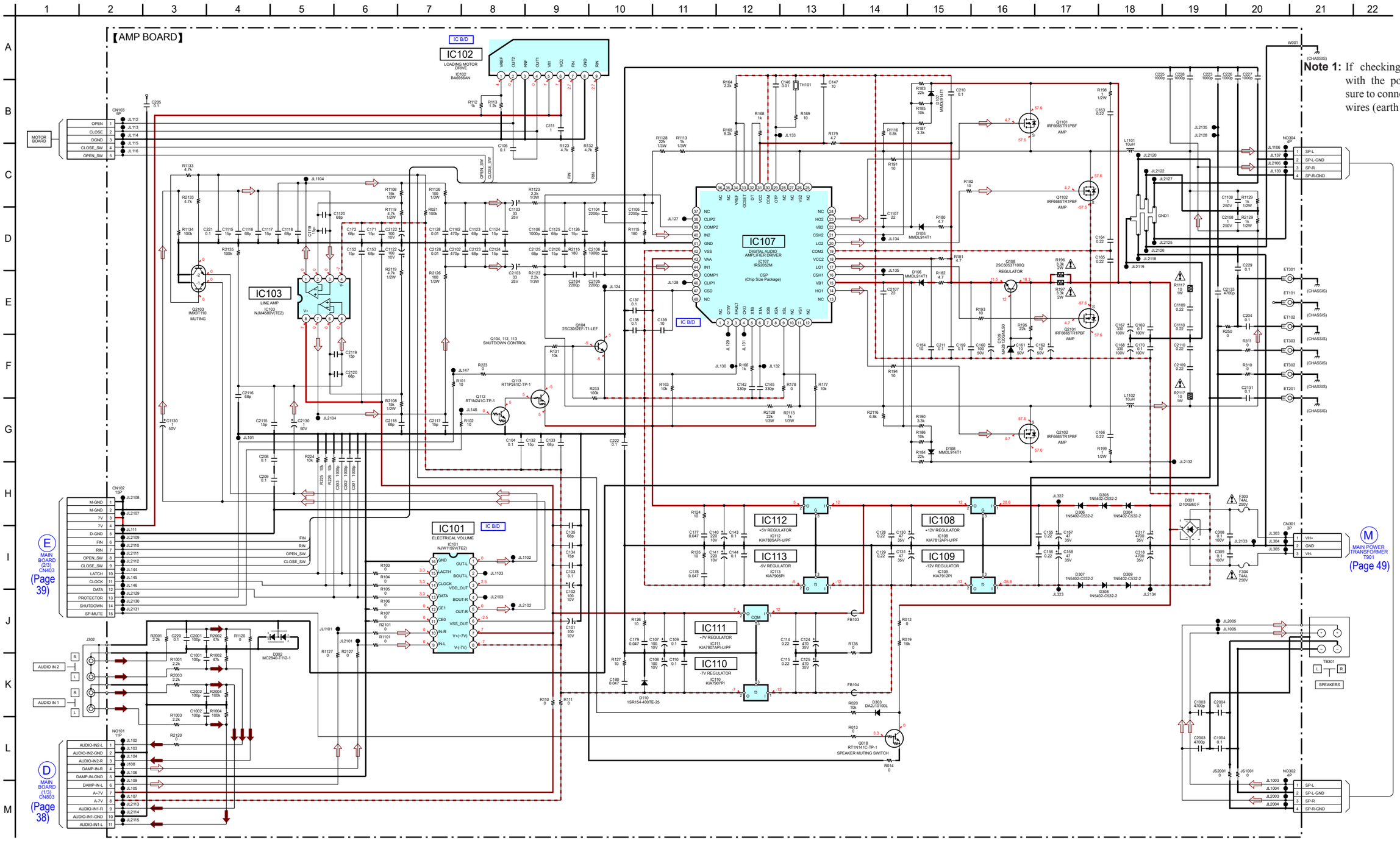

Note 1: If checking operations with the power on, be sure to connect the GND wires (earth terminals).

Note 2: IC107, Q1101, Q1102, Q2101 and Q2102 on the AMP board cannot exchange with single. When these part are damaged, exchange the complete mounted board.

Note 3: When the MOTOR board is damaged, exchange the LOADING (BK) ASSY.

5-19. PRINTED WIRING BOARD - AMP Section (1/2) -

• See page 29 for Circuit Boards Location. • : Uses unleaded solder.

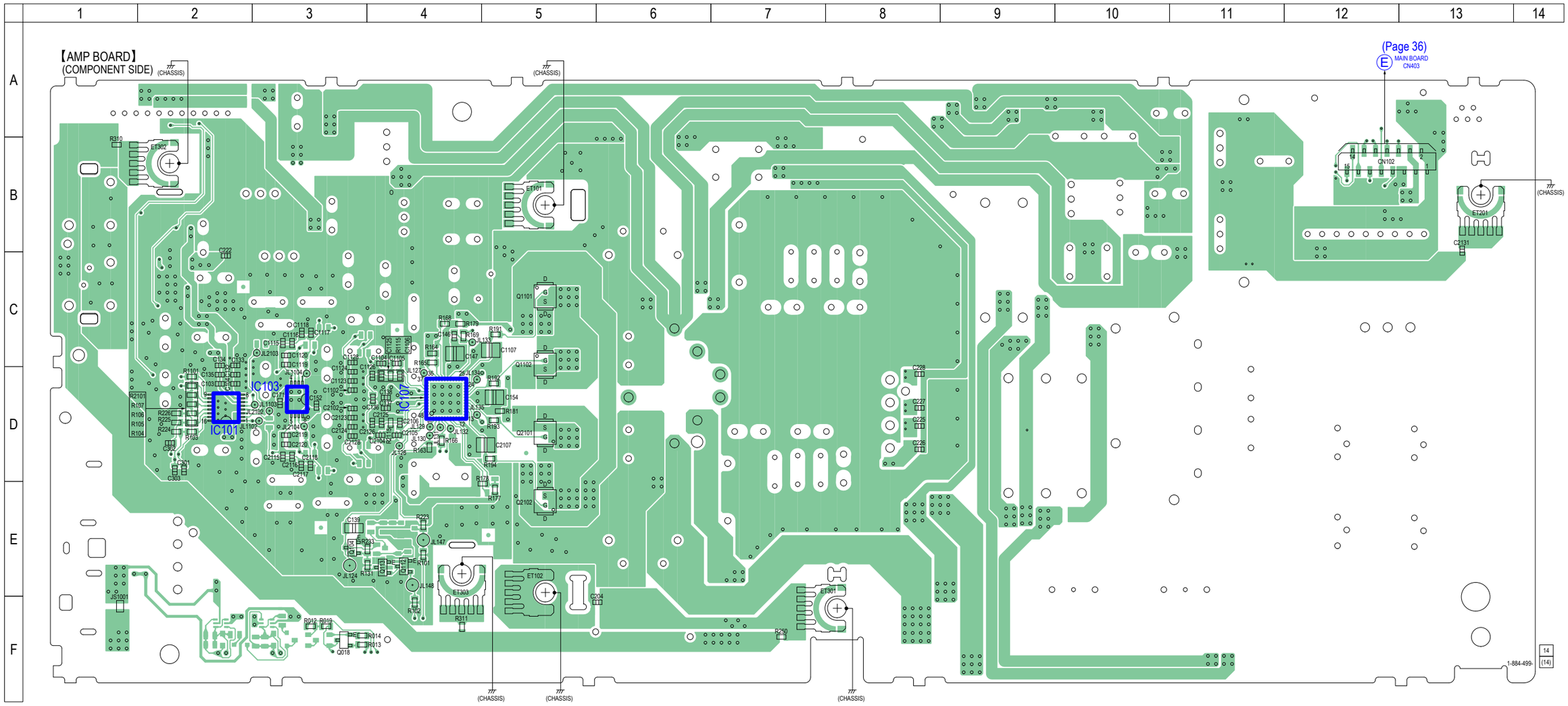

Note: IC107, Q1101, Q1102, Q2101 and Q2102 on the AMP board cannot exchange with single. When these part are damaged, exchange the complete mounted board.

5-20. PRINTED WIRING BOARDS - AMP Section (2/2) - • See page 29 for Circuit Boards Location. • : Uses unleaded solder.

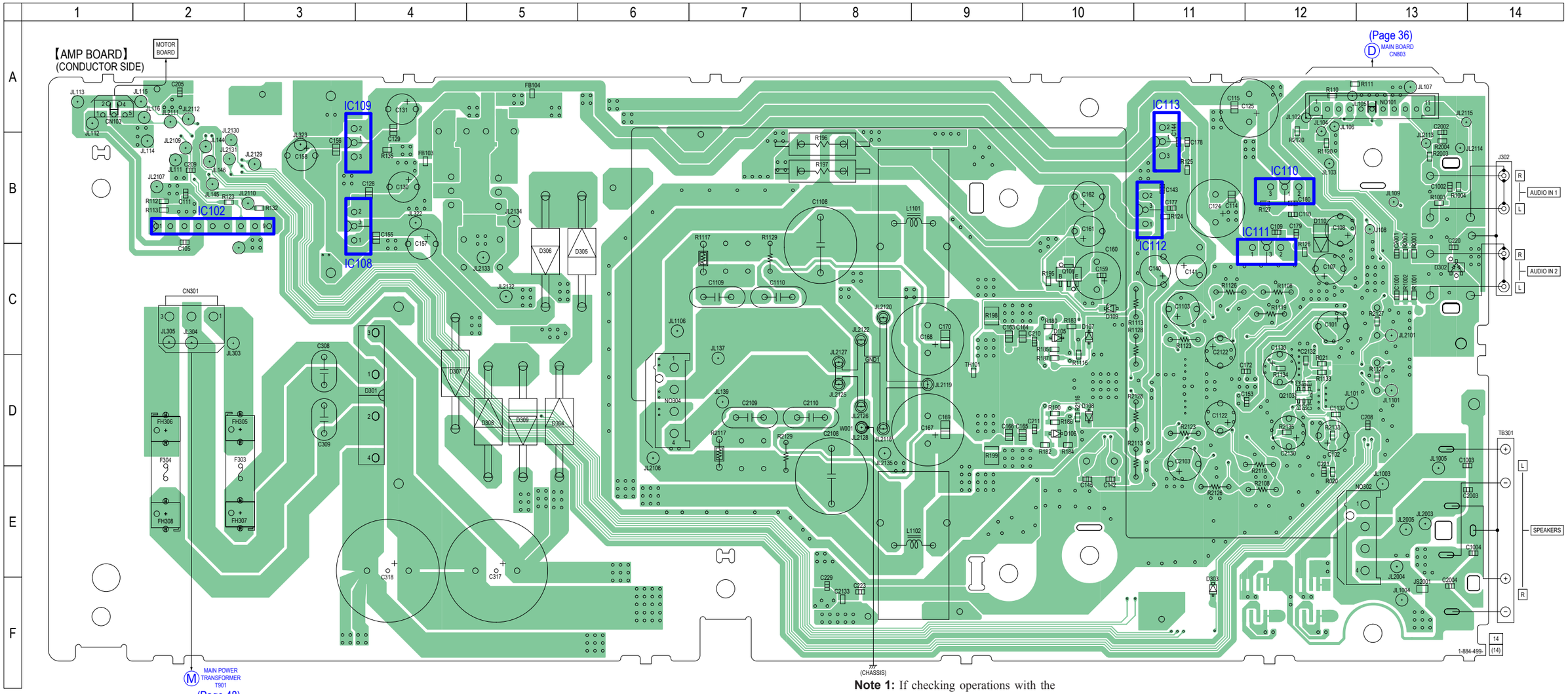

Note 1: If checking operations with the power on, be sure to connect the GND wires (earth terminals).

Note 2: When the MOTOR board is damaged, exchange the LOADING (BK) ASSY.

5-21. PRINTED WIRING BOARDS - HP/JOG1/JOG2/USB Boards -

• See page 29 for Circuit Boards Location. • : Uses unleaded solder.

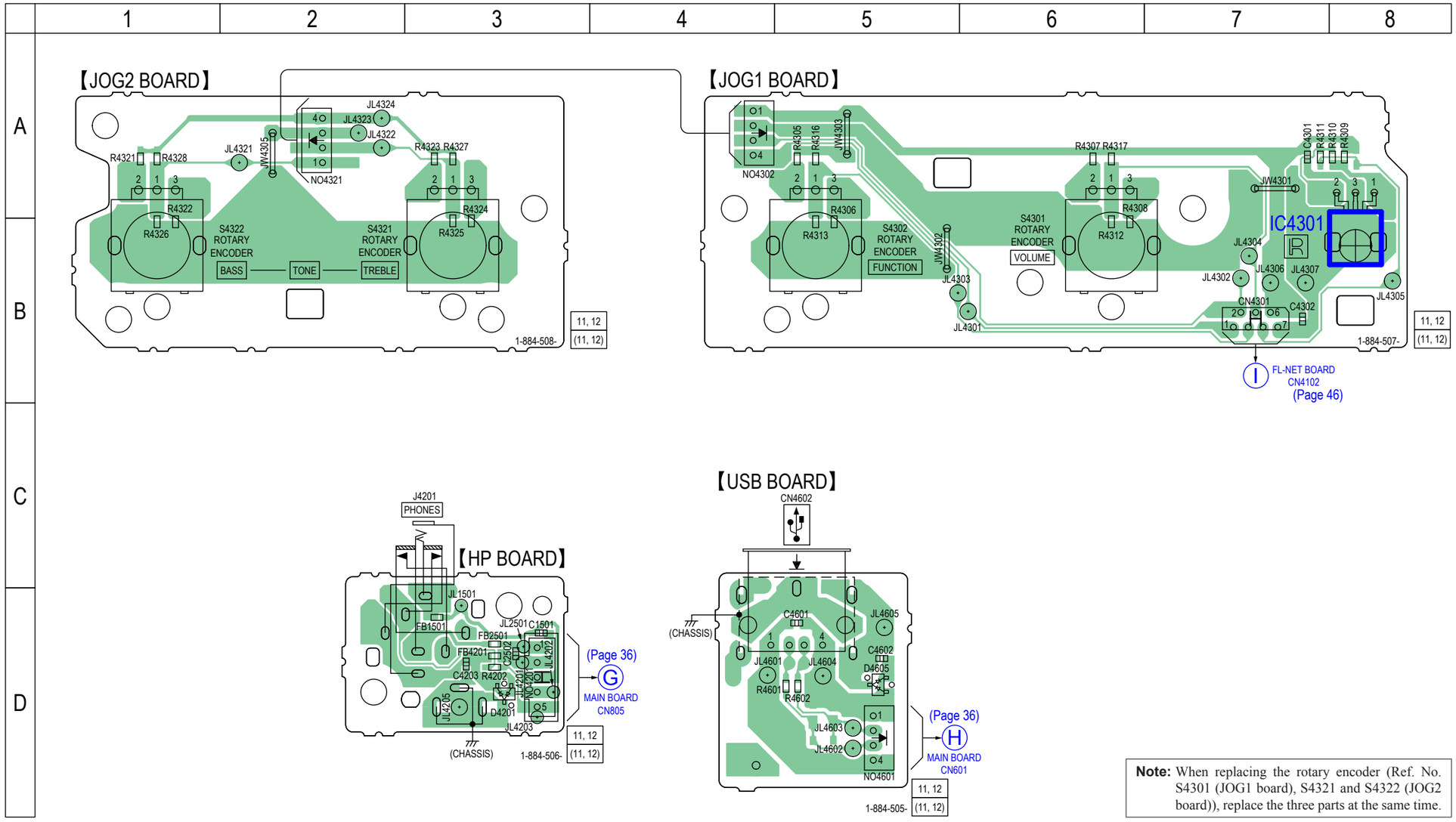

Note: When replacing the rotary encoder (Ref. No. S4301 (JOG1 board), S4321 and S4322 (JOG2 board)), replace the three parts at the same time.

5-22. SCHEMATIC DIAGRAM - HP/JOG1/JOG2/USB Boards -

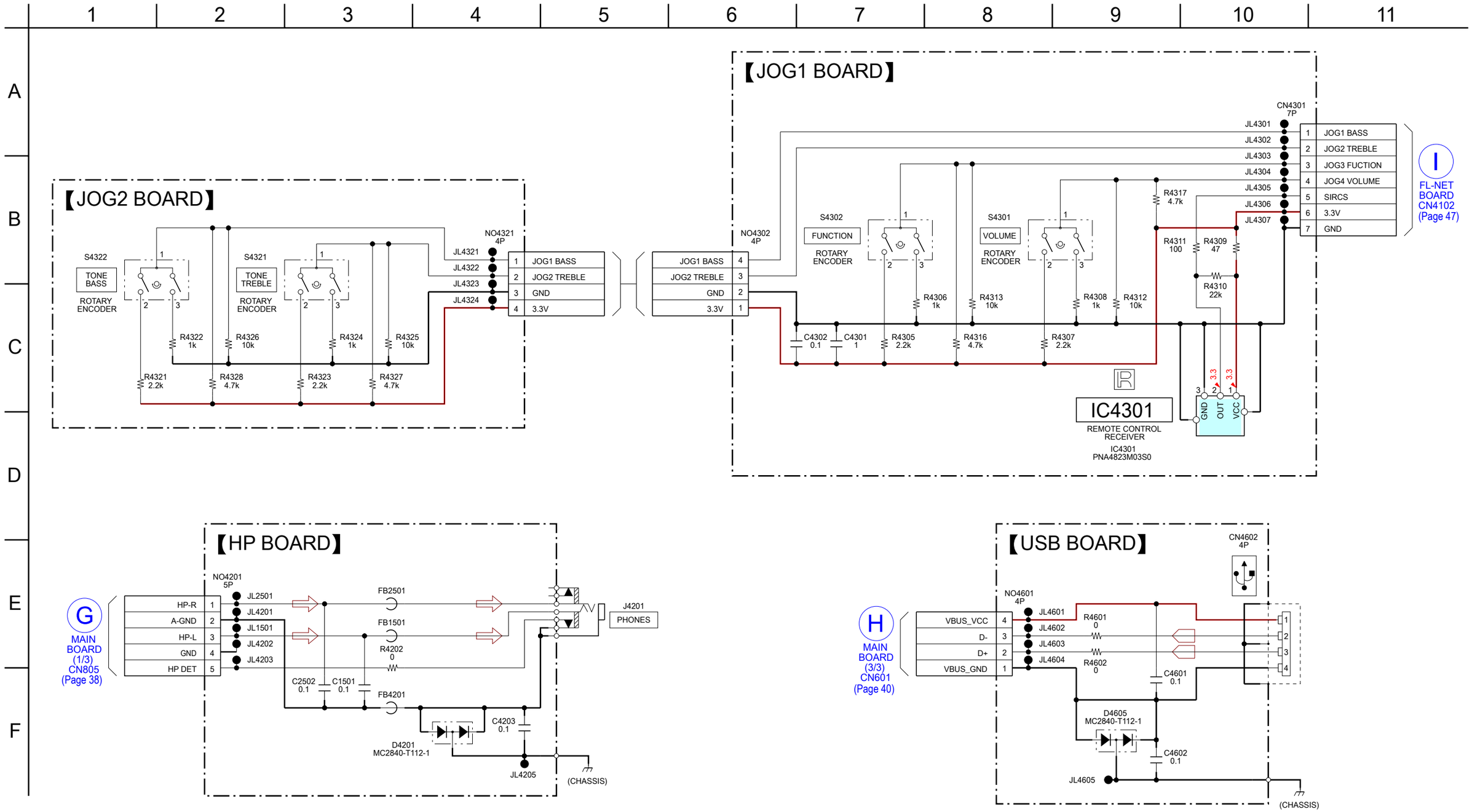

Note: When replacing the rotary encoder (Ref. No. S4301 (JOG1 board), S4321 and S4322 (JOG2 board)), replace the three parts at the same time.

5-23. PRINTED WIRING BOARD - FL-NET Board -

• See page 29 for Circuit Boards Location. • : Uses unleaded solder.

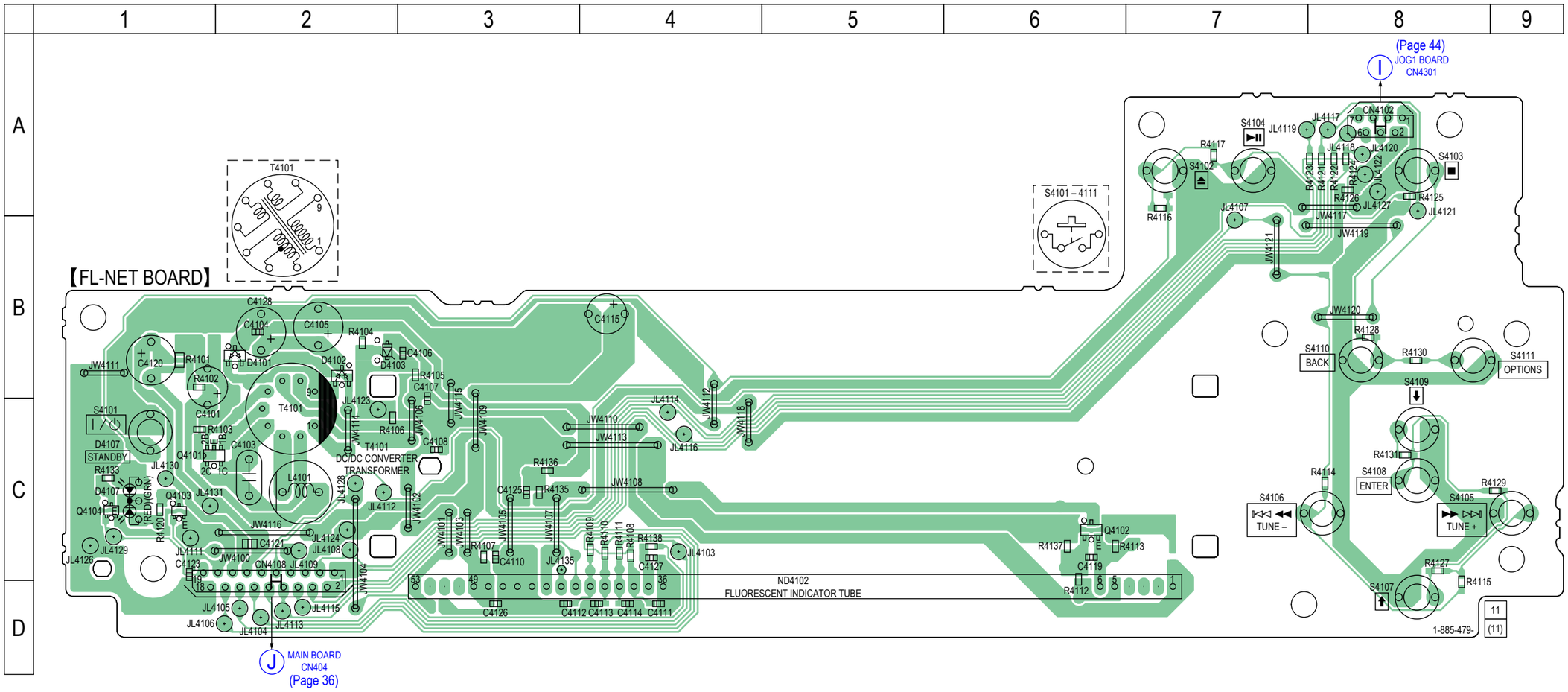

5-24. SCHEMATIC DIAGRAM - FL-NET Board - • See page 50 for Waveforms.

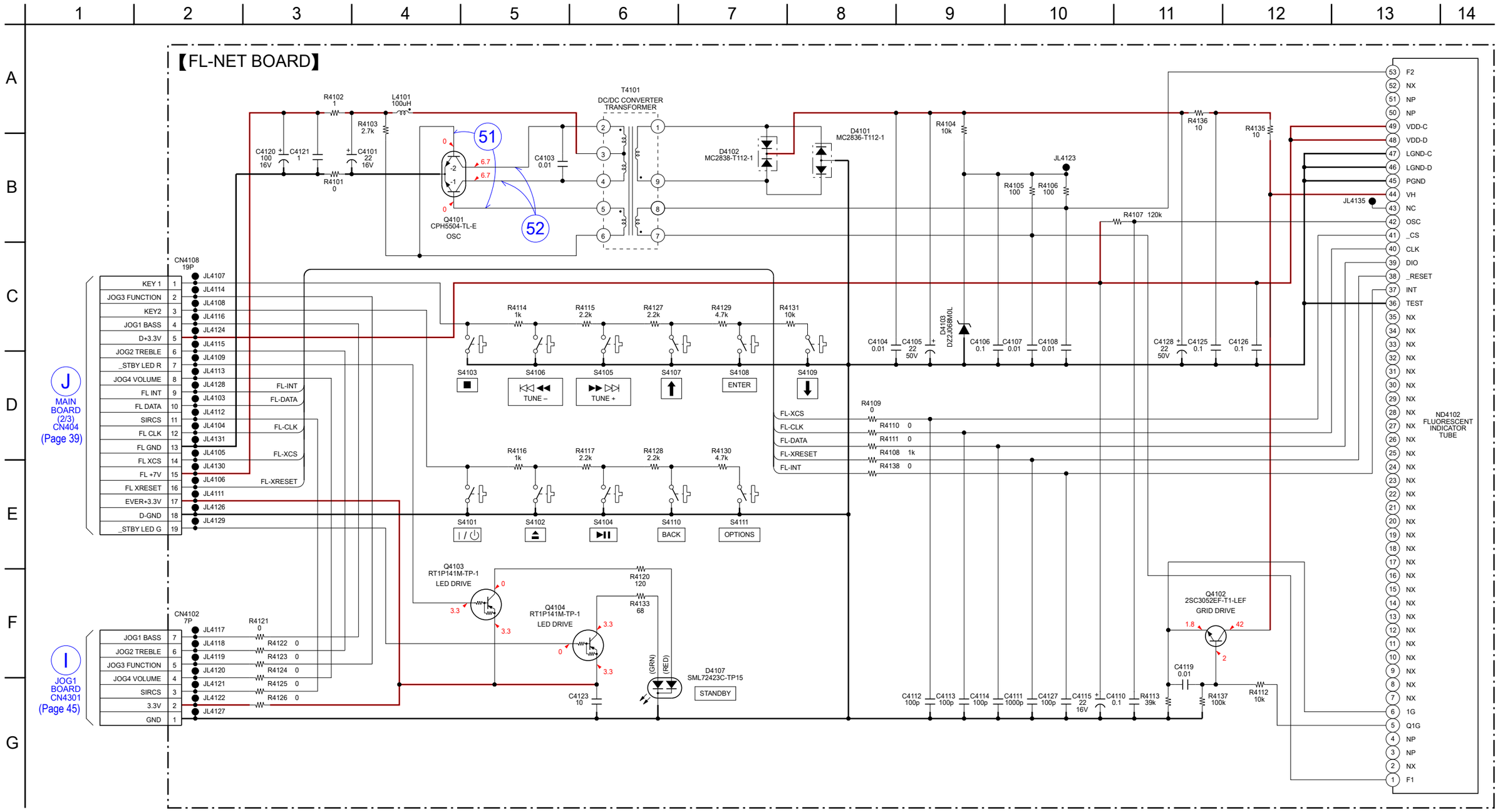

5-25. PRINTED WIRING BOARDS - POWER SUPPLY Section -

• See page 29 for Circuit Boards Location. • : Uses unleaded solder.

【SUB-PT BOARD】

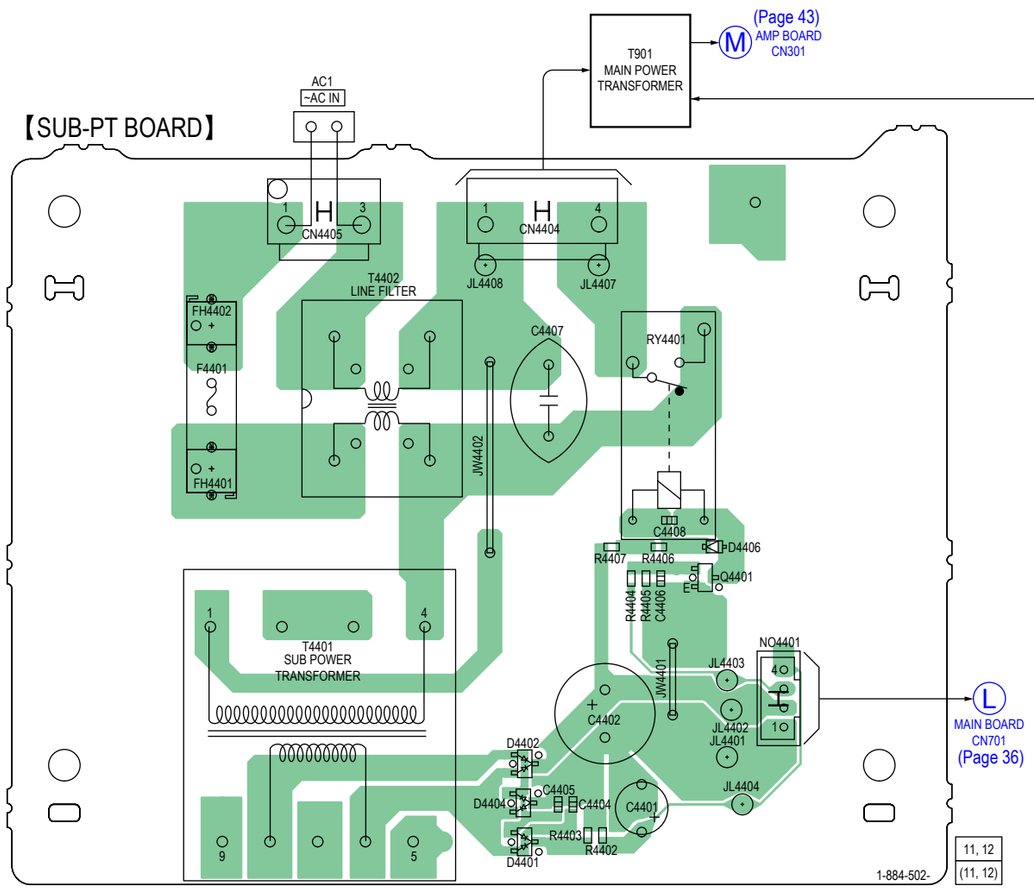

【DCDC BOARD】(COMPONENT SIDE)

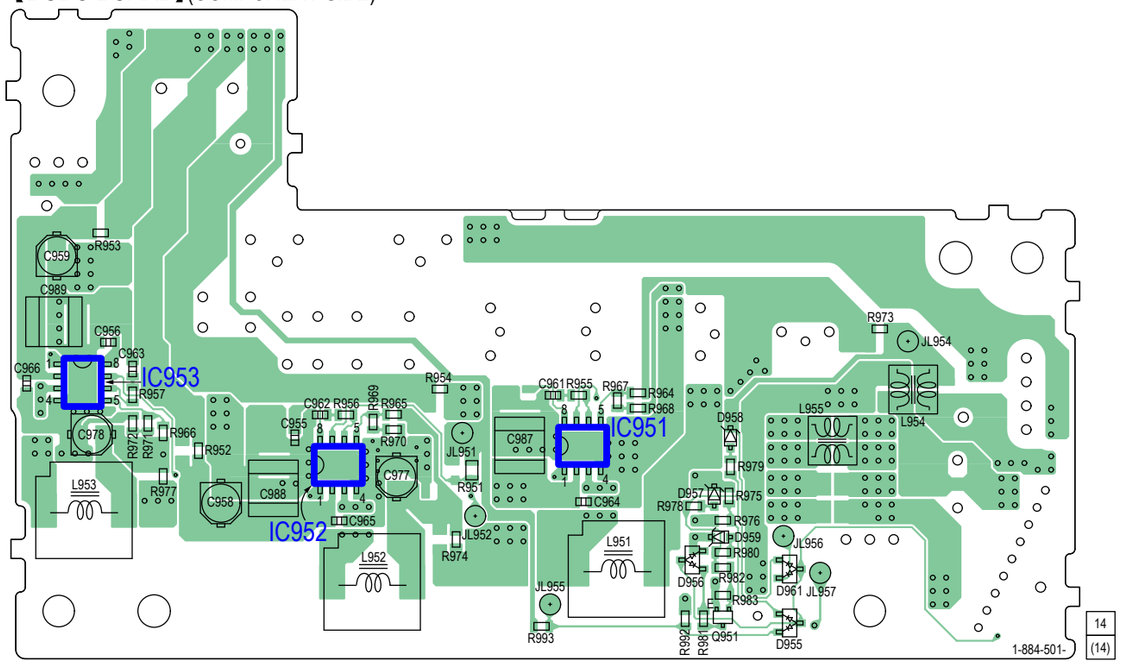

【DCDC BOARD】(CONDUCTOR SIDE)

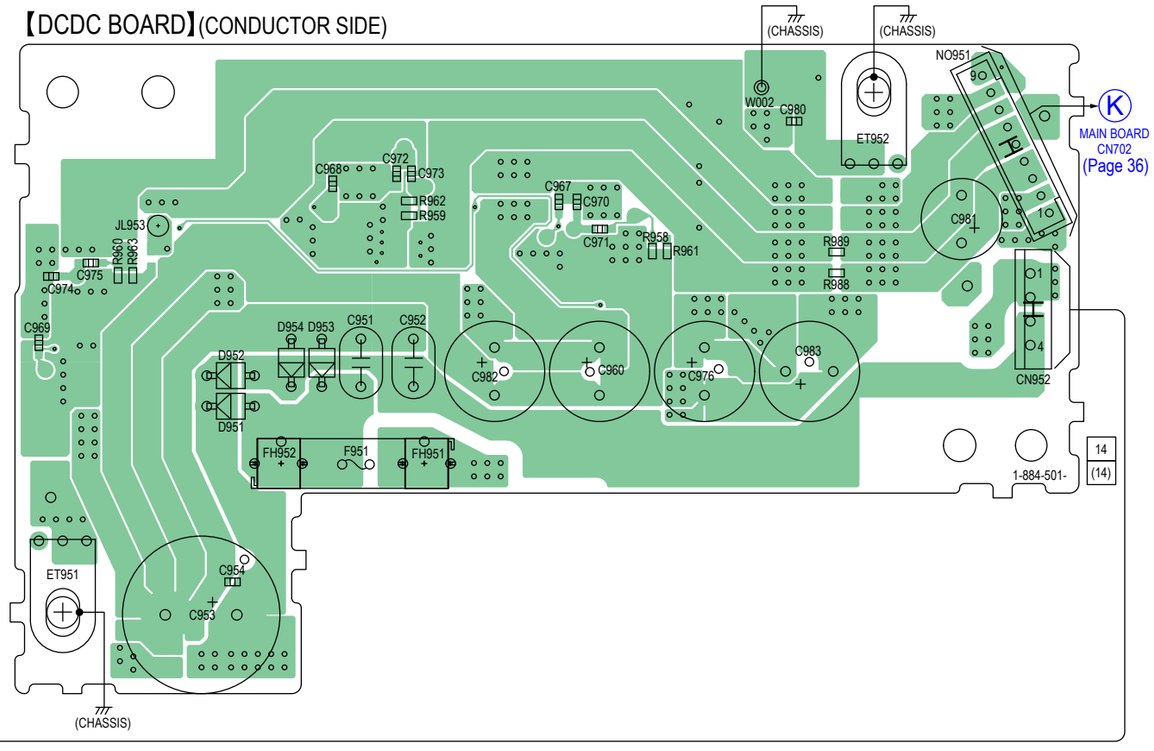

5-26. SCHEMATIC DIAGRAM - POWER SUPPLY Section - • See page 51 for IC Block Diagrams.

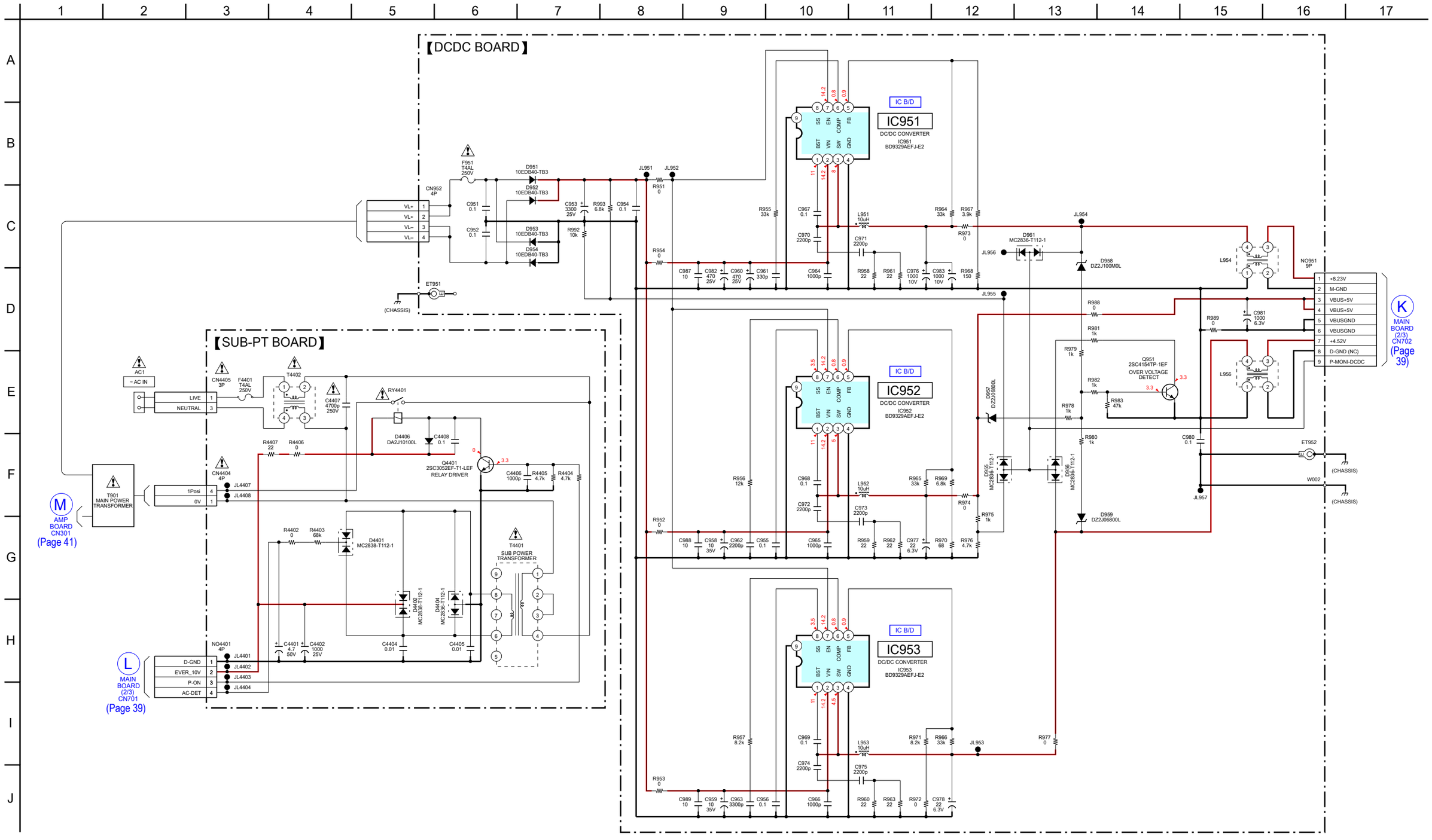

• **Waveforms**

– BD94DC Board –

① **IC101 ㉔ (XO) (CD play mode)**

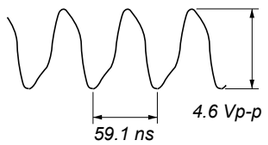

2 V/DIV, 50 ns/DIV

② **IC101 ㊽ (RFO) (CD play mode)**

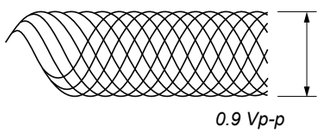

500 mV/DIV, 1 µs/DIV

– TUNER Board –

⑪ **IC4501 ⑲ (X2)**

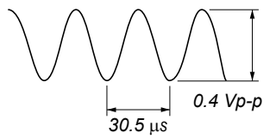

200 mV/DIV, 20 µs/DIV

– NET Board –

㉑ **IC5002 ② (RCKI)**

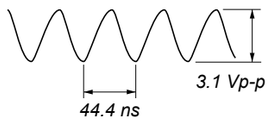

1 V/DIV, 20 ns/DIV

㉒ **IC5002 ⑤ (BCKI)**

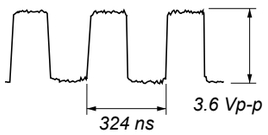

1 V/DIV, 100 ns/DIV

㉓ **IC5002 ⑥ (LRCKI)**

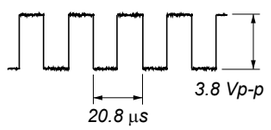

1 V/DIV, 10 µs/DIV

㉔ **IC5002 ㉔ (LRCKO)**

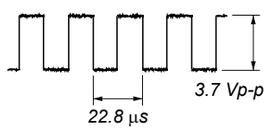

1 V/DIV, 10 µs/DIV

㉕ **IC5002 ㉕ (BCKO)**

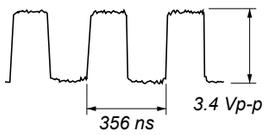

1 V/DIV, 100 ns/DIV

㉖ **IC5003 ③ (SW)**

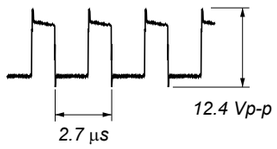

5 V/DIV, 1 µs/DIV

– MAIN Board –

㉛ **IC805 ㉔ (ERR1_LRC)**

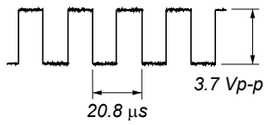

1 V/DIV, 10 µs/DIV

㉜ **IC805 ㉕ (ERR2_BCK)**

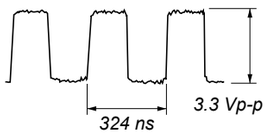

1 V/DIV, 100 ns/DIV

㉝ **IC805 ㉘ (BCKO)**

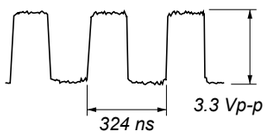

1 V/DIV, 100 ns/DIV

㉞ **IC805 ㉙ (LRCKO)**

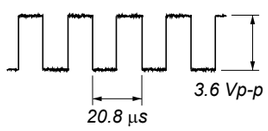

1 V/DIV, 10 µs/DIV

㉟ **IC805 ㉚ (AMCLKO)**

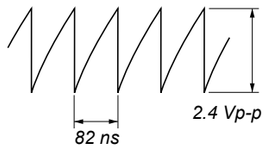

1 V/DIV, 50 ns/DIV

㊱ **IC805 ㉞ (XO)**

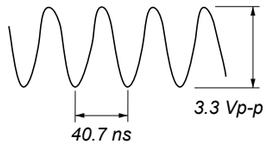

1 V/DIV, 20 ns/DIV

㊲ **IC805 ㊶ (LRCKI)**

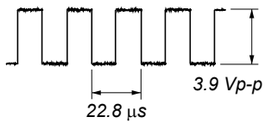

1 V/DIV, 10 µs/DIV

㊳ **IC805 ㊷ (BCKI)**

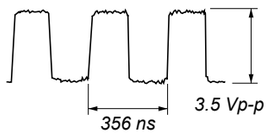

1 V/DIV, 100 ns/DIV

㊴ **IC805 ㊹ (LRCKI2)**

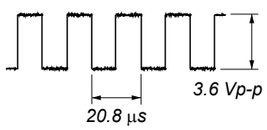

1 V/DIV, 10 µs/DIV

㊵ **IC805 ㊺ (BCKI2)**

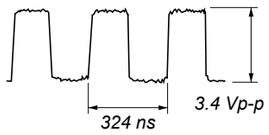

1 V/DIV, 100 ns/DIV

㊶ **IC805 ㊼ (LRCKI3)**

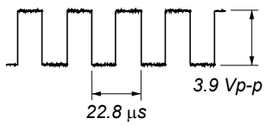

1 V/DIV, 10 µs/DIV

㊷ **IC805 ㊽ (BCKI3)**

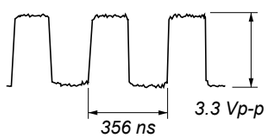

1 V/DIV, 100 ns/DIV

㊸ **IC805 ㊿ (LRCKI4)**

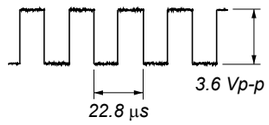

1 V/DIV, 10 µs/DIV

㊹ **IC805 (51) (BCKI4)**

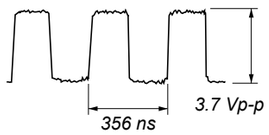

1 V/DIV, 100 ns/DIV

㊺ **IC402 ⑪ (Xcout)**

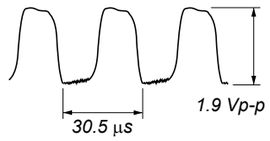

1 V/DIV, 20 µs/DIV

㊻ **IC402 ⑬ (Xout)**

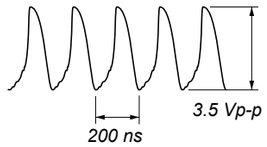

1 V/DIV, 100 ns/DIV

㊼ **IC601 ㊶ (XOUT_PLL)**

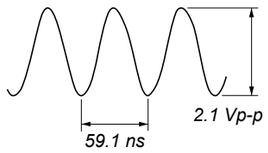

1 V/DIV, 20 ns/DIV

– FL-NET Board –

(51) **Q4101 (Base)**

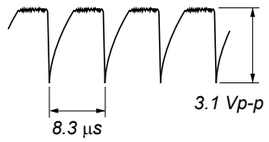

1 V/DIV, 5 µs/DIV

(52) **Q4101 (Collector)**

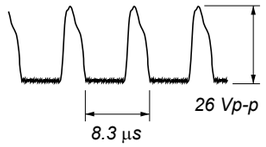

10 V/DIV, 5 µs/DIV

- **IC Block Diagrams**

– BD94DC Board –

IC201 MM3404A15URE

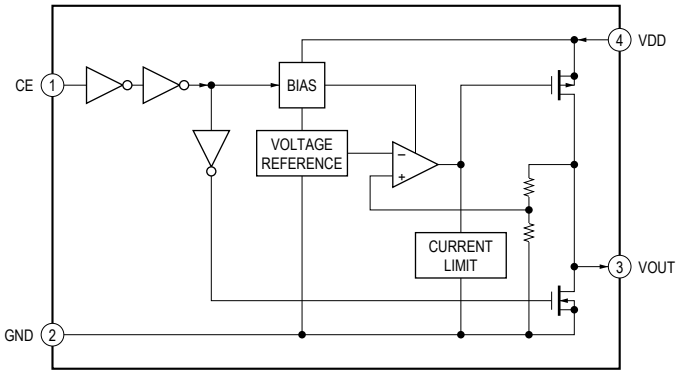

IC401 BA5826HFP-E2

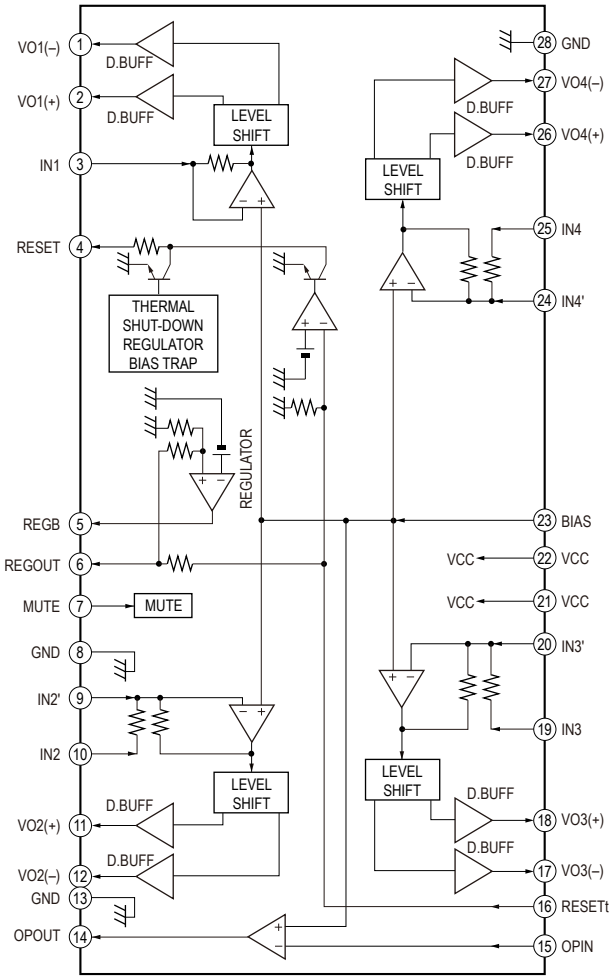

– TUNER Board –

IC4501 RZ5B800-0002E2

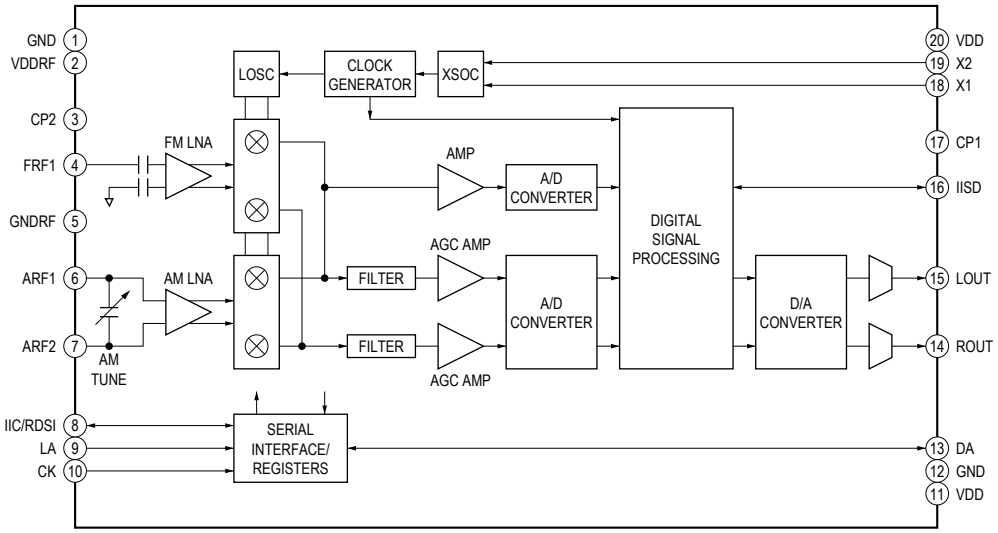

– DAB Board –

IC4001 MM3291CNRE

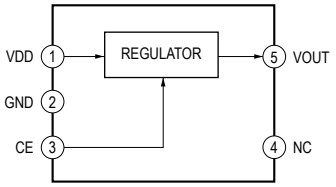

– NET Board –

IC5001 SI-3010KM-TLS

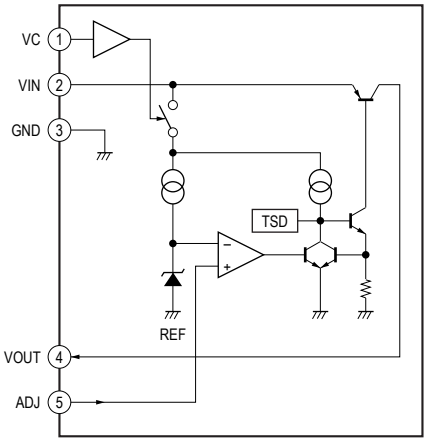

IC5002 SRC4182

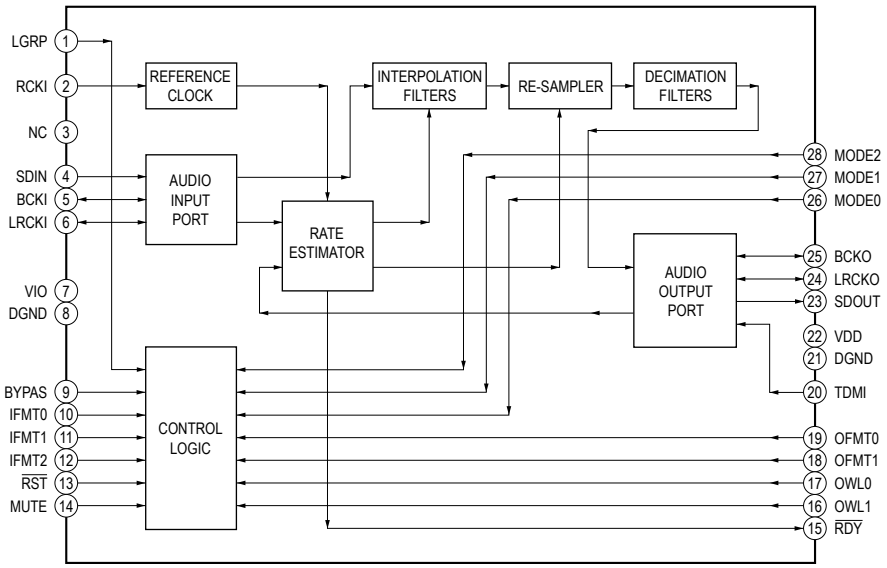

IC5003 BD9329AEFJ-E2

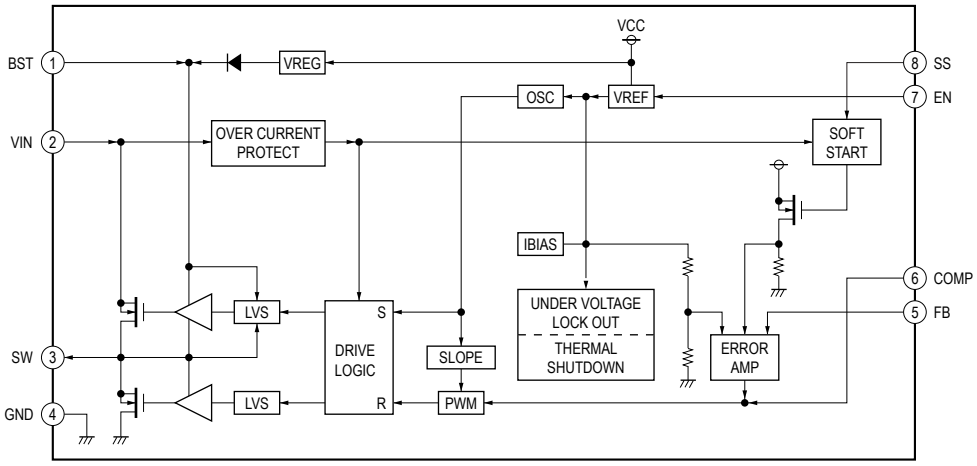

– MAIN Board –

IC403 PST8429UL

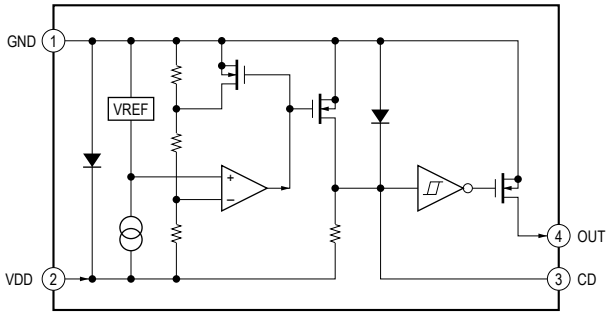

IC602 TPS2553DBVR

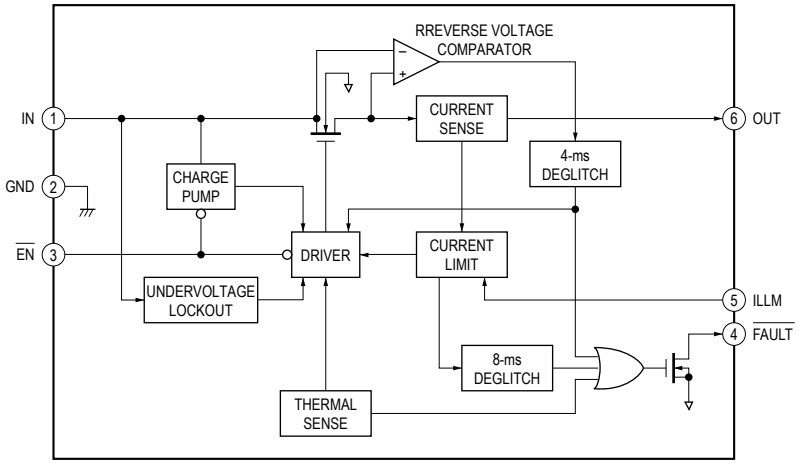

IC704 BD00GA3WEFJ-E2
IC705 BD00GC0WEFJ-SE2

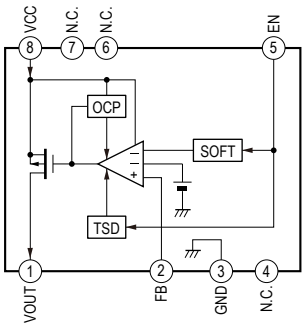

IC706 TK73400AU3G0L-C

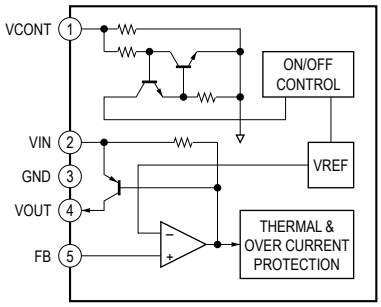

IC801 74LVC157A-PW

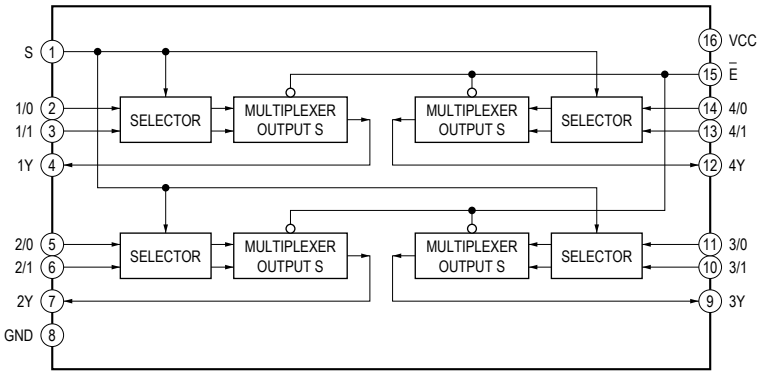

IC802 PCM1681PWPR

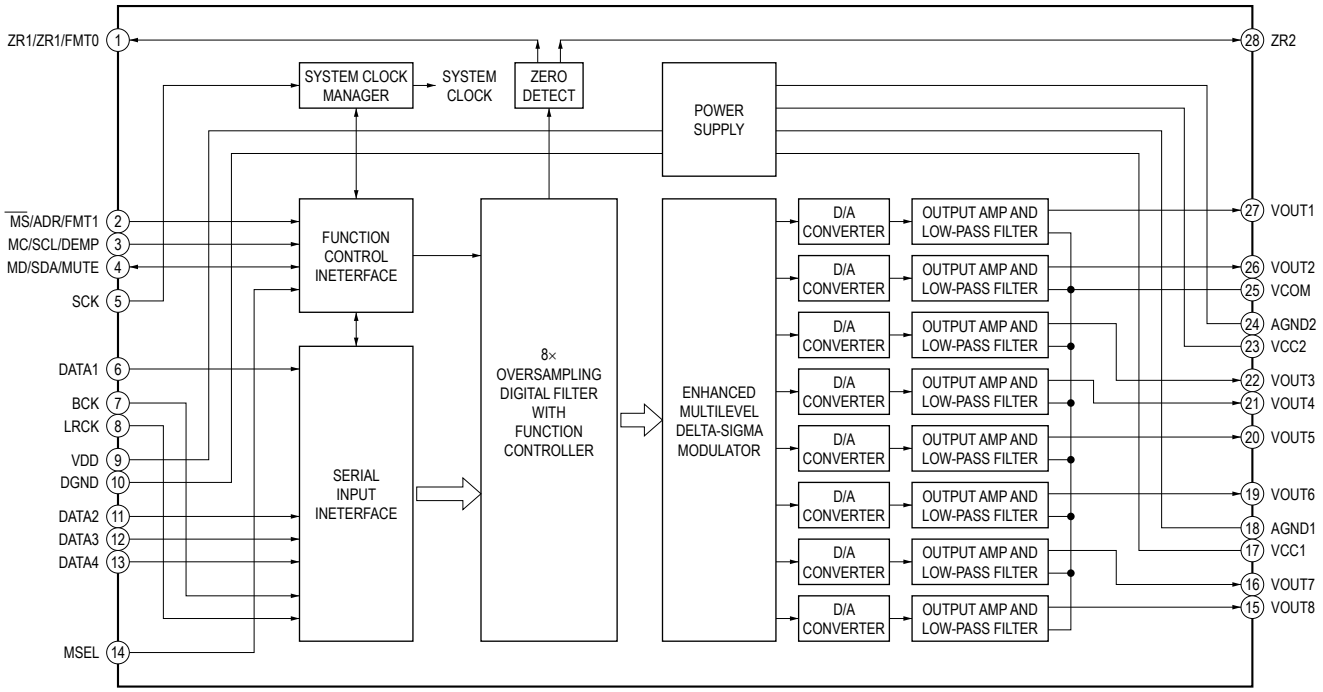

IC803 MC14052BDTR2

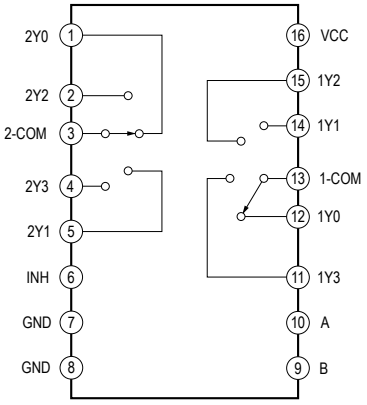

IC807 TK11150CSCL-G

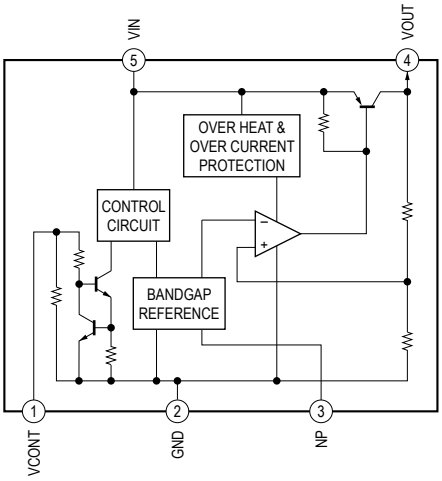

IC804 PCM1808PWR

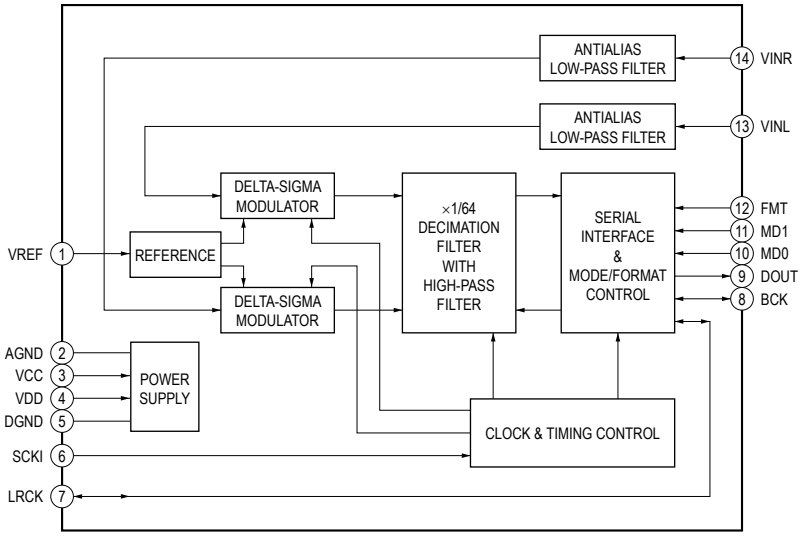

– AMP Board –

IC101 NJW1159V (TE2)

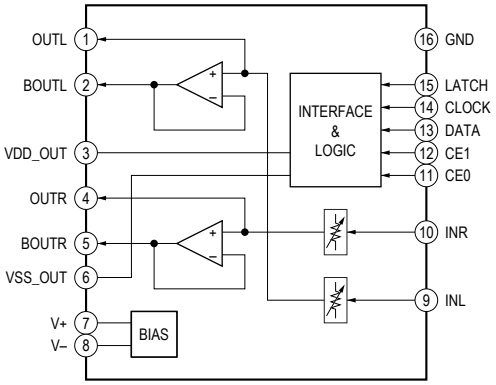

IC102 BA6956AN

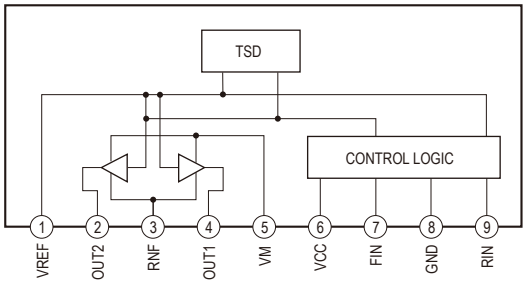

IC107 IRS2052M

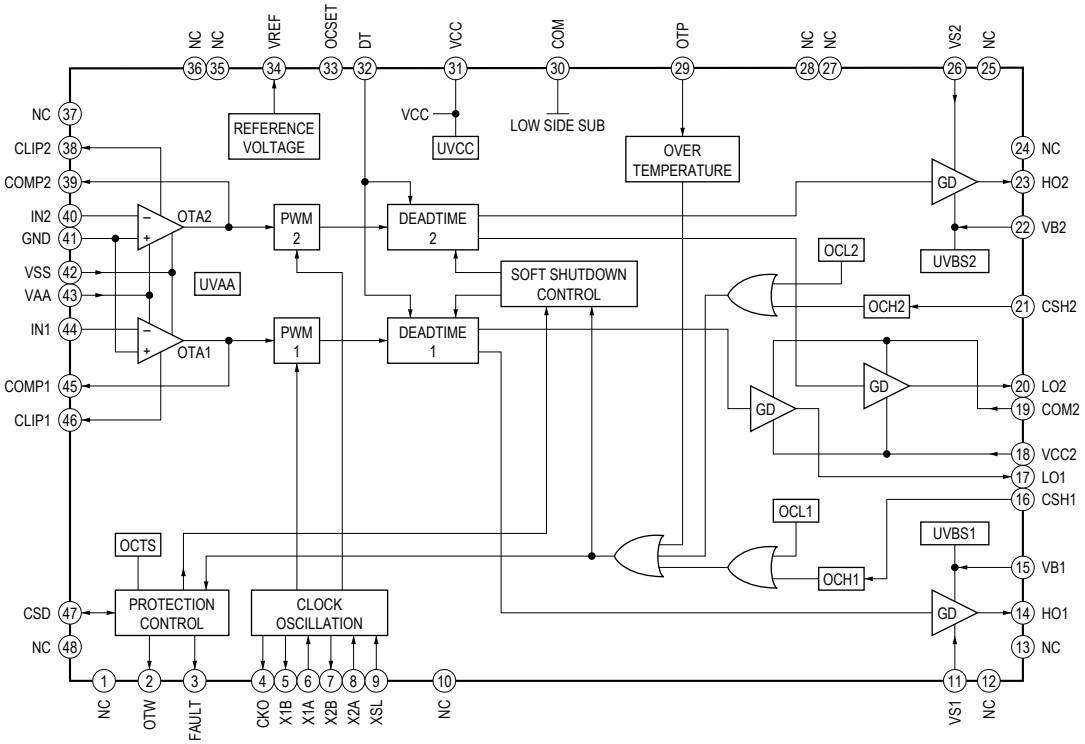

– DCDC Board –

IC951 – 953 BD9329AEFJ-E2

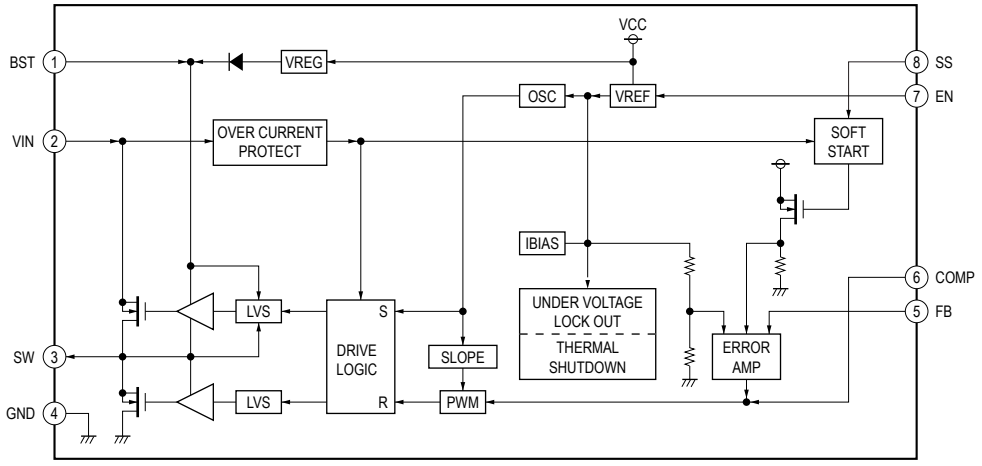

- **IC Pin Function Description**

BD94DC BOARD IC101 TC94A70FG-101 (CD-MP3 PROCESSOR)

Pin No.	Pin Name	I/O	Description
1	AVSS3	-	Ground terminal
2	RFZI	I	RF ripple zero crossing signal input terminal
3	RFRP	O	RF ripple signal output terminal
4	SBAD	O	Sub beam addition signal output terminal Not used
5	FEO	O	Focus error signal output terminal Not used
6	TEO	O	Tracking error signal output terminal
7	TEZI	I	Tracking error zero crossing signal input terminal
8	AVDD3	-	Power supply terminal (+3.3V)
9	FOO	O	Focus coil drive signal output terminal
10	TRO	O	Tracking coil drive signal output terminal
11	VREF	I	Reference voltage (+1.65V) input terminal
12	FMO	O	Sled motor drive signal output terminal
13	DMO	O	Spindle motor drive signal output terminal
14	VSSP3	-	Ground terminal
15	VCOI	I	VCO control voltage input terminal
16	VDDP3	-	Power supply terminal (+3.3V)
17	VDD1	-	Power supply terminal (+1.5V)
18	VSS1	-	Ground terminal
19	FGIN	I	FG signal input terminal Not used
20	IN_SW	I	Disc inner position detection signal input terminal Not used
21	/DFCT	O	Not used
22	XVSS3	-	Ground terminal
23	XI	I	System clock input terminal (16.9344 MHz)
24	XO	O	System clock output terminal (16.9344 MHz)
25	XVDD3	-	Power supply terminal (+3.3V)
26	DVSS3	-	Ground terminal
27	ROUT	O	Audio data (R-ch) output terminal Not used
28	DVDD3	-	Power supply terminal (+3.3V)
29	DVR	O	Reference voltage (+1.65V) output terminal Not used
30	LOUT	O	Audio data (L-ch) output terminal Not used
31	DVSS3	-	Ground terminal
32	VDDT3	-	Power supply terminal (+3.3V)
33	VSS1	-	Ground terminal
34	VDD1	-	Power supply terminal (+1.5V)
35	VDDM1	-	Power supply terminal (+1.5V)
36	SRAMSTB	I	S-RAM standby mode control signal input terminal Fixed at “L” in this unit
37	XRST	I	Reset signal input from the system controller “L”: reset
38 to 41	BUS0 to BUS3	I	Serial data input from the system controller
42	BUCK	I	Serial data transfer clock signal input from the system controller
43	XCCE	I	Chip enable signal input from the system controller
44	TEST	I	Setting terminal for test mode Normally fixed at “L”
45	IRQ	I	Interrupt request signal input terminal Not used
46	ST_REQ/CKO	O	Request signal output terminal Not used
47	AOUT2	O	Audio data output terminal Not used
48	REQ	O	Request signal output to the system controller
49	PIO1/ST_REQ	O	Request signal output terminal Not used
50	PIO2	O	Not used
51	GATE	I	Gate signal input terminal
52	VSS1	-	Ground terminal
53	VDDT3	-	Power supply terminal (+3.3V)
54	SBSY	O	Subcode block sync signal output to the system controller
55	FOK	O	Not used
56	IPF	O	Not used
57	/LOCK	O	Not used
58	ZDET	O	Zero detection signal output terminal Not used
59	GPIN	I	Not used

Pin No.	Pin Name	I/O	Description
60	MS	I	Micro controller interface mode selection signal input terminal Fixed at “H” in this unit
61	DOUT	O	Digital audio data output terminal Not used
62	AOUT1	O	Audio data output to the DSP
63	BCKO	O	Bit clock signal output to the DSP
64	LRCKO	O	L/R sampling clock signal output to the DSP
65	AIN	I	Digital audio data input terminal Not used
66	BCKI	I	Bit clock signal input terminal Not used
67	LRCKI	I	L/R sampling clock signal input terminal Not used
68	VDD1	-	Power supply terminal (+1.5V)
69	VSS1	-	Ground terminal
70	AWRC	-	Not used
71	PVDD3	-	Power supply terminal (+3.3V)
72	PDO	O	Phase error margin signal between EFM signal and PLCK signal output terminal
73	TMAXS	O	TMAX detection signal output terminal Not used
74	TMAX	O	TMAX detection signal output terminal
75	LPFN	I	Inverted signal input from the operation amplifier for PLL loop filter
76	LPFO	O	Signal output from the operation amplifier for PLL loop filter
77	PVREF	I	Reference voltage (+1.65V) input terminal
78	VCOF	O	VCO filter output terminal
79	PVSS3	-	Ground terminal
80	SLCO	O	EFM slice level output terminal
81	RFI	I	RF signal input terminal
82	RFRPI	I	RF ripple signal input terminal
83	RFEQ0	O	EFM slice level output terminal
84	VRO	O	Reference voltage (+1.65V) output terminal
85	RESIN	O	External resistor connection terminal
86	VMDIR	O	Reference voltage (+1.65V) output terminal for automatic power control circuit
87	TESTR	O	Low-pass filter terminal for RFEQO offset correction
88	AGCI	I	RF signal amplitude adjustment amplification input terminal
89	RFO	O	RF signal generation amplification output terminal
90	RVDD3	-	Power supply terminal (+3.3V)
91	LDO	O	Laser diode on/off control signal output to the automatic power control circuit “H”: laser diode on
92	MDI	I	Light amount monitor input from the laser diode of optical pick-up block
93	RVSS3	-	Ground terminal
94	C	I	Main beam (C) input from the optical pick-up block
95	A	I	Main beam (A) input from the optical pick-up block
96	D	I	Main beam (D) input from the optical pick-up block
97	B	I	Main beam (B) input from the optical pick-up block
98	F	I	Sub beam (F) input from the optical pick-up block
99	TNPC	O	External capacitor connection terminal
100	E	I	Sub beam (E) input from the optical pick-up block

MAIN BOARD IC402 R5F3650NBDFA (SYSTEM CONTROLLER)

Pin No.	Pin Name	I/O	Description
1	DP SDA/SPI DOUT	O	Serial data output to the fluorescent indicator tube
2	DP SCL	O	Serial data transfer clock signal output to the fluorescent indicator tube
3	DP CS	O	Chip select signal output to the fluorescent indicator tube
4	SIRCS	I	SIRCS signal input from the remote control receiver
5	BCo SPI DOUT	O	Serial data output to the wireless LAN module
6	BCo SPI DIN	I	Serial data input from the wireless LAN module
7	BCo SPI SCL	O	Serial data transfer clock signal output to the wireless LAN module
8	BYTE	I	External data bus width selection signal input terminal Fixed at “L” in this unit
9	CNVss	I	Processor mode selection signal input terminal
10	Xcin	I	Sub system clock input terminal (32.768 kHz)
11	Xcout	O	Sub system clock output terminal (32.768 kHz)
12	RESET	I	System reset signal input from the reset signal generator “L”: reset For several hundreds msec. after the power supply rises, “L” is input, then it change to “H”
13	Xout	O	Main system clock output terminal (5 MHz)
14	Vss	-	Ground terminal
15	Xin	I	Main system clock input terminal (5 MHz)
16	Vcc	-	Power supply terminal (+3.3V)
17	NMI	I	Non-maskable interrupt signal input terminal Not used
18	RDS-INT	I	RDS interrupt signal input from the FM/AM receiver
19	SBSY	I	Subcode block sync signal input from the CD-MP3 processor
20	AC-CUT	I	AC cut on/off detection signal input terminal “L”: AC cut on
21	ACTIVE LED/ BCo_POWER	O	LED drive signal output terminal for STANDBY indicator (green color) “L”: LED on
22	CP IIC CLK	O	Serial data transfer clock signal output to the EEPROM
23	BCo_SPI_CS	O	Chip enable signal output to the wireless LAN module
24	CP IIC SDA	O	Serial data output to the EEPROM
25	BCo_RESET	O	Reset signal output to the sample rate converter and wireless LAN module “L”: reset
26	CP RESET	O	Reset signal output to the EEPROM “L”: reset
27	BCo_SPI_REQ	I	Request signal input from the wireless LAN module
28	BCo_SPI_READY	I	Ready signal input from the wireless LAN module
29	IIC_CLK	O	IIC serial data transfer clock signal output terminal Not used
30	IIC_SDA	O	IIC serial data output terminal Not used
31	CONT_B	O	External audio input selection signal output terminal “L”: tuner (FM/AM), “H”: AUDIO IN 1 or AUDIO IN 2
32	I2S_SW	O	USB/DAB selection signal output to the multi plexer
33	DEBUGGER I/O	O	Not used
34	CONT_A	O	External audio input selection signal output terminal “L”: AUDIO IN 1, “H”: tuner (FM/AM) or AUDIO IN 2
35	DAB_TxD_OUT	O	Serial data output to the DAB tuner module (G2BNiP only)
36	DAB_RxD_IN	I	Serial data input from the DAB tuner module (G2BNiP only)
37	DAMP_SD	O	Shut down signal output to the digital audio amplifier driver “L”: shut down
38	DAMP_PROTECT	I	Protect (fault) signal input from the digital audio amplifier driver “L”: protect
39	EVOL_LATCH	O	Serial data latch pulse signal output to the electrical volume
40	EVOL_CLK	O	Serial data transfer clock signal output to the electrical volume
41	FLASH WRITE MODE IN	I	Flash write mode setting signal input terminal Not used
42	D-AMP-MUTE	O	Muting on/off control signal output terminal “L”: muting on
43	EVOL_DATA	O	Serial data output to the electrical volume
44	DSP_DOUT_MUTE	O	Muting on/off control signal output to the DSP “L”: muting on
45	DSP_RESET	O	Reset signal output to the DSP “L”: reset
46	FLASH WRITE MODE IN	I	Flash write mode setting signal input terminal Not used
47	DSP IIC_SDA	O	Serial data output to the DSP
48	DSP IIC_CLK	O	Serial data transfer clock signal output to the DSP
49, 50	DAB-POWER_3.3, DAB-POWER_1.2	O	Power supply on/off control signal output terminal for the DAB tuner section “H”: power on (G2BNiP only)
51	STANDBY_LED	O	LED drive signal output terminal for STANDBY indicator (red color) “L”: LED on
52	ST LATCH	O	Serial data latch pulse signal output to the FM/AM receiver
53	ST DATA	I/O	Serial data input/output with the FM/AM receiver
54	ST CLK	O	Serial data transfer clock signal output to the FM/AM receiver

Pin No.	Pin Name	I/O	Description
55	HP DET	I	Headphone plug insert detection signal input terminal "H": headphone plug is inserted
56	HP MUTE	O	Headphone muting on/off control signal output terminal "L": muting on
57	CDM OUT SW	I	Disc tray open position detection switch input terminal "L": disc tray is opened
58	CDM IN SW	I	Disc tray close position detection switch input terminal "L": disc tray is closed
59	CDM LOAD IN	O	Loading motor drive signal output terminal (for loading in) "H": motor on
60	CDM LOAD OUT	O	Loading motor drive signal output terminal (for loading out) "H": motor on
61	DP RESET	O	Reset signal output to the fluorescent indicator tube "L": reset
62	Vcc	-	Power supply terminal (+3.3V)
63	STANDBY RELAY	O	Main power supply on/off control signal output terminal "H": power on
64	Vss	-	Ground terminal
65	SPEC-IN	I	Destination setting terminal
66	AUDIO LEVEL DET	I	Audio level detection signal input from the DSP
67	USB IRPTO	I	Interrupt signal input from the USB driver
68	USB MCHNG	I	Music change signal input from the USB driver
69	KEY 1	I	Front panel key input terminal (A/D input)
70	VOLUME JOG (AD)	I	Jog dial pulse input from the rotary encoder (VOLUME) (A/D input)
71	FUNCTION JOG (AD)	I	Jog dial pulse input from the rotary encoder (FUNCTION) (A/D input)
72	TREBLE JOG (AD)	I	Jog dial pulse input from the rotary encoder (TONE TREBLE) (A/D input)
73	Vcont	O	Power supply on/off control signal output terminal "H": power on
74	KEY WAKE UP (POWER)	I	Key wake-up signal input terminal
75	USB_OVERCURRENT	I	USB over current detection signal input terminal "L": over current
76	BCo_MUTE	I	Muting control signal input from the wireless LAN module
77	USB SDA	O	Serial data output to the USB driver
78	USB CLK	O	Serial data transfer clock signal output to the USB driver
79	USB BUSY	I	Busy signal input from the USB driver
80	USB RESET	O	Reset signal output to the USB driver "L": reset
81	BASS JOG (AD)	I	Jog dial pulse input from the rotary encoder (TONE BASS) (A/D input)
82	DAC_MUTE	O	Muting on/off control signal output to the D/A converter "H": muting on
83	POWER_MONITOR	I	Power monitor input terminal
84	USB_POWER	O	Power supply on/off control signal output terminal for the USB VBUS "H": power on
85	KEY2	I	Front panel key input terminal (A/D input)
86	ZIPANG_ON	O	Muting on/off control signal output to the DSP and sample rate converter "L": muting on
87	CD XRST	O	Reset signal output to the CD-MP3 processor "L": reset
88	CD DRIVER MUTE	O	Motor drive muting on/off control signal output to the motor/coil driver "L": muting on
89	MP3 IREQ	I	Request signal input from the CD-MP3 processor
90	CD CCE	O	Chip enable signal output to the CD-MP3 processor
91	CD CLK	O	Serial data transfer clock signal output to the CD-MP3 processor
92	NO USE	O	Not used
93 to 95	CD BUS3 to CD BUS1	O	Serial data output to the CD-MP3 processor
96	Avss	-	Ground terminal
97	CD BUS0	O	Serial data output to the CD-MP3 processor
98	VREF	I	Reference voltage (+3.3V) input terminal
99	Avcc	-	Power supply terminal (+3.3V)
100	WiFi CH SEL	I	WiFi maximum channel selection signal input terminal "L": 11 ch, "H": 13 ch Fixed at "L" in this unit

MAIN BOARD IC601 BU94604BKV-E2 (USB DRIVER)

Pin No.	Pin Name	I/O	Description
1	RESETX	I	Reset signal input from the system controller "L": reset
2	SEL_SLAVE	I	Mode setting terminal "L": slave, "H": stand alone Fixed at "L" in this unit
3	SEL_MP3	I	Mode setting terminal "L": MP1, MP2 and MP3 play, "H": MP3 play only Fixed at "L" in this unit
4	SEL_DOUT	I	Mode setting terminal "L": digital output, "H": analog D/A converter output Fixed at "L" in this unit
5	SEL_VOL	I	Mode setting terminal "L": volume control invalid, "H": volume control valid Fixed at "L" in this unit
6	SEL_APLAY	I	Mode setting terminal "L": auto play on, "H": auto play off Fixed at "H" in this unit
7	SEL_UTPKT	I	Mode setting terminal "L": USB test packet output, "H": normal operation Fixed at "H" in this unit
8	IRPTO	O	Interrupt signal output to the system controller
9	TEST2	-	Test terminal
10	MCHNG	O	Music change signal output to the system controller
11	BUSY	O	Busy signal output to the system controller
12	IIC SCL	I	Serial data transfer clock signal input from the system controller
13	IIC SDA	I	Serial data input from the system controller
14, 15	A0, A1	I	Slave address selection terminal Fixed at "L" in this unit
16	SEL_SMAN	I	Mode setting terminal "L": mode3, "H": mode2 Fixed at "H" in this unit
17	TEST3	-	Test terminal
18	DVDDIO	-	Power supply terminal (+3.3V)
19	SD_CON	I	SD card connection detection signal input terminal Not used
20	SD_DO	I	Serial data input terminal Not used
21	SD_CLK	O	Serial data transfer clock signal output terminal Not used
22	SD_DI	O	Serial data output terminal Not used
23	SD_CS	O	Chip select signal output terminal Not used
24	DVSS	-	Ground terminal
25, 26	TEST5, TEST6	-	Test terminal
27	DVDD_M2	-	Bias capacitor connection terminal
28 to 30	TEST6 to TEST8	-	Test terminal
31	ATEST1	-	Test terminal
32	AVDDC	-	Power supply terminal (+3.3V)
33	USB_DM	I	Audio data (negative) input from the USB connector
34	USB_DP	I	Audio data (positive) input from the USB connector
35	AVSSC	-	Ground terminal
36	REXTI	I	Bias resistor connection terminal
37	VOREFI	-	Test terminal
38	VDD_PLL	-	Power supply terminal (+3.3V)
39	TEST_PLL	I	Terminal for test
40	XIN_PLL	I	System clock input terminal (16.9344 MHz)
41	XOUT_PLL	O	System clock output terminal (16.9344 MHz)
42	VSS_PLL	-	Ground terminal
43	DAVSS	-	Ground terminal
44	RDACO	O	Audio data (R-ch) output terminal Not used
45	VCDACO	O	Reference voltage (+1.65V) output terminal
46	LDACO	O	Audio data (L-ch) output terminal Not used
47	DAVDD	-	Power supply terminal (+3.3V)
48	AMUTE	O	Audio muting control signal output terminal Not used
49 to 52	TEST9 to TEST12	-	Test terminal
53	LRCK	O	L/R sampling clock signal output to the DSP (G2NiP) L/R sampling clock signal output to the multi plexer (G2BNiP)
54	BCK	O	Bit clock signal output to the DSP (G2NiP) Bit clock signal output to the multi plexer (G2BNiP)
55	DATA	O	Audio data output to the DSP (G2NiP) Audio data output to the multi plexer (G2BNiP)
56	TEST13	I	Test terminal
57	DVDD_M1	-	Bias capacitor connection terminal
58 to 61	TEST14 to TEST17	I	Test terminal
62	DVSS	-	Ground terminal
63	TMODE	I	Not used
64	DVDDIO	-	Power supply terminal (+3.3V)

MAIN BOARD IC805 BU9408KS2 (DSP)

Pin No.	Pin Name	I/O	Description
1	DVDDPLL	-	Power supply terminal (+3.3V)
2	FILT1	-	Filter connection terminal for the PLL
3	DGNDPLL	-	Ground terminal
4	FILT2	-	Filter connection terminal for the PLL
5	SCANTEST	I	Digital test signal input terminal Not used
6	I2CADR	-	IIC slave address selection terminal Not used
7	SCL	I	IIC serial data transfer clock signal input from the system controller
8	SDA	I	IIC serial data input from the system controller
9	DGNDIO1	-	Ground terminal
10	RESETB	I	Reset signal input from the system controller "L": reset
11	DVDDCOR1	-	External capacitor connection terminal
12, 13	MUTE1B, MUTE2B	I	Muting on/off control signal input from the system controller "L": muting on
14	MUTE3B	I	Muting on/off control signal input terminal Not used
15	AGNDDA1	-	Ground terminal
16	AOUTR1	O	Audio data (Rch) output terminal Not used
17	AOUTL1	O	Audio level detection signal output to the system controller
18, 19	AVDDDA1, AVDDDA2	-	Power supply terminal (+3.3V)
20	AOUTR2	O	Audio data (Rch) output terminal Not used
21	VREFDA	I	Reference voltage(+1.65V) input terminal
22	AOUTL2	O	Audio data (Lch) output terminal Not used
23	AGNDDA2	-	Ground terminal
24	ERR1_LRC	O	L/R sampling clock signal output to the sample rate converter
25	ERR2_BCK	O	Bit clock signal output to the sample rate converter
26	DATASO	O	Audio data output to the sample rate converter
27	DATAMO	O	Audio data output to the D/A converter
28	BCKO	O	Bit clock signal output to the D/A converter
29	LRCKO	O	L/R sampling clock signal output to the D/A converter
30	AMCLKO	O	Master clock signal output to the D/a converter
31	SPDIFO	O	S/PDIF signal output terminal Not used
32	DGNDIO2	-	Ground terminal
33	XI	I	System clock input terminal (24.576 MHz)
34	XO	O	System clock output terminal (24.576 MHz)
35	DVDDIO	-	Power supply terminal (+3.3V)
36	ANATEST	I	Analog test signal input terminal Not used
37	DVDDCOR2	-	External capacitor connection terminal
38	DVDDREG	-	Power supply terminal (+3.3V)
39	LDOPOFF	I	Internal regulator POFF signal input terminal Not used
40	DGNDREG	-	Ground terminal
41	LRCKI1	I	L/R sampling clock signal input from the wireless LAN module
42	BCKI1	I	Bit clock signal input from the wireless LAN module
43	DATAI1	I	Audio data input from the wireless LAN module
44	LRCKI2	I	L/R sampling clock signal input from the A/D converter
45	BCKI2	I	Bit clock signal input from the A/D converter
46	DATAI2	I	Audio data input from the A/D converter
47	LRCKI3	I	L/R sampling clock signal input from the CD-MP3 processor
48	BCKI3	I	Bit clock signal input from the CD-MP3 processor
49	DATAI3	I	Audio data input from the CD-MP3 processor
50	LRCKI4	I	L/R sampling clock signal input from the USB driver (G2NiP) L/R sampling clock signal input from the multi plexer (G2BNiP)
51	BCKI4	I	Bit clock signal input from the USB driver (G2NiP) Bit clock signal input from the multi plexer (G2BNiP)
52	DATAI4	I	Audio data input from the USB driver (G2NiP) Audio data input from the multi plexer (G2BNiP)

SECTION 6
EXPLODED VIEWS

Note:
- -XX and -X mean standardized parts, so they may have some difference from the original one.
- Items marked "*" are not stocked since they are seldom required for routine service. Some delay should be anticipated when ordering these items.
- The mechanical parts with no reference number in the exploded views are not supplied.
- Color Indication of Appearance Parts Example:
  KNOB, BALANCE (WHITE) . . . (RED)
  ↑ Parts Color ↑ Cabinet's Color

The components identified by mark ⚠ or dotted line with mark ⚠ are critical for safety.
Replace only with part number specified.

6-1. OVERALL SECTION

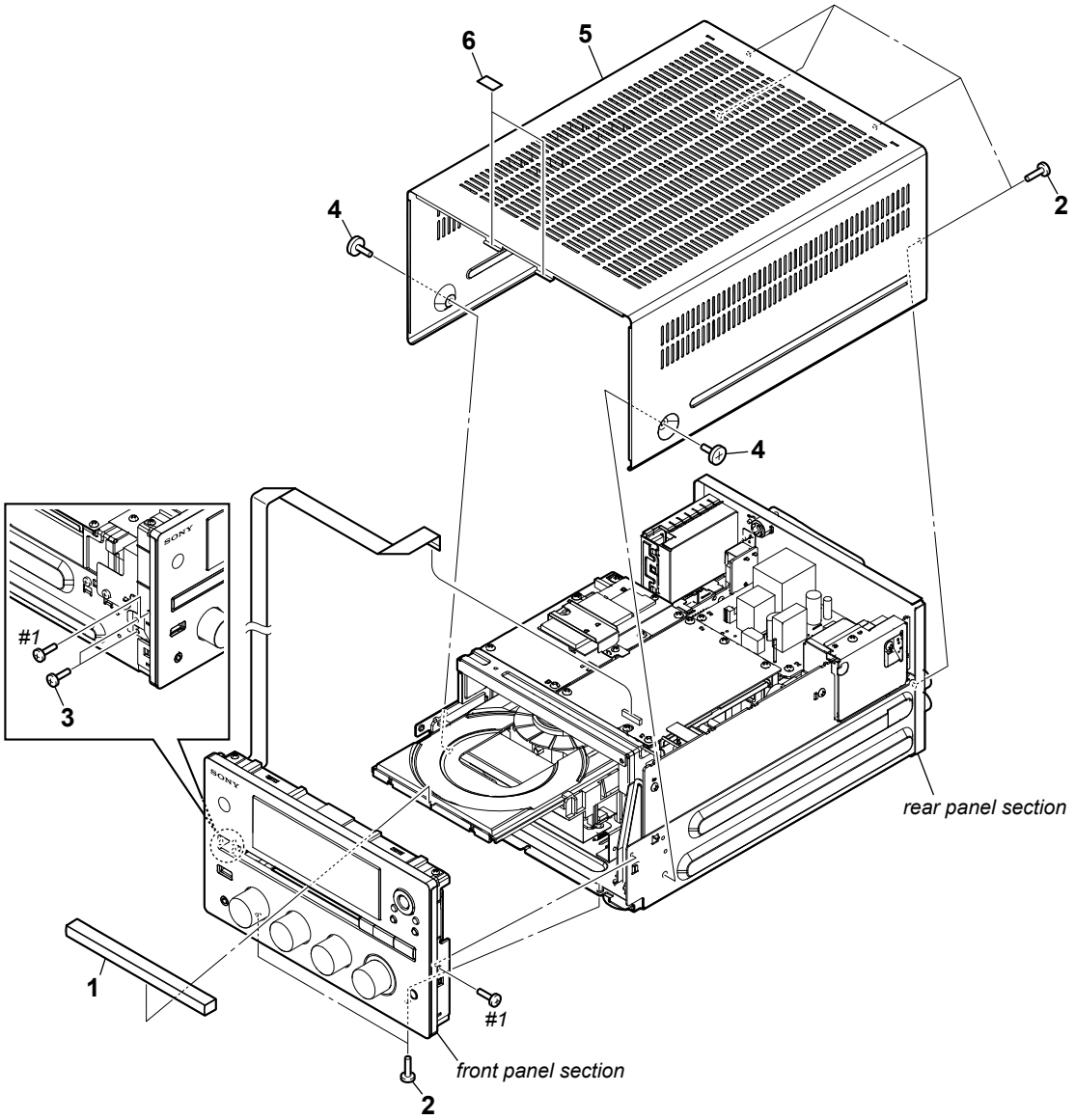

Ref. No.	Part No.	Description	Remark	Ref. No.	Part No.	Description	Remark
1	4-275-189-01	PANEL (CD TRAY)		5	4-275-276-01	CASE (NW)	
2	3-704-515-32	SCREW (BV/RING)					
3	3-077-331-21	+BV3 (3-CR)		6	4-415-588-01	SHEET, CASE	
4	4-227-843-31	SCREW (TP), FLAT HEAD		#1	7-685-646-71	SCREW +BVTP 3X8 TYPE2 IT-3	

6-2. FRONT PANEL SECTION

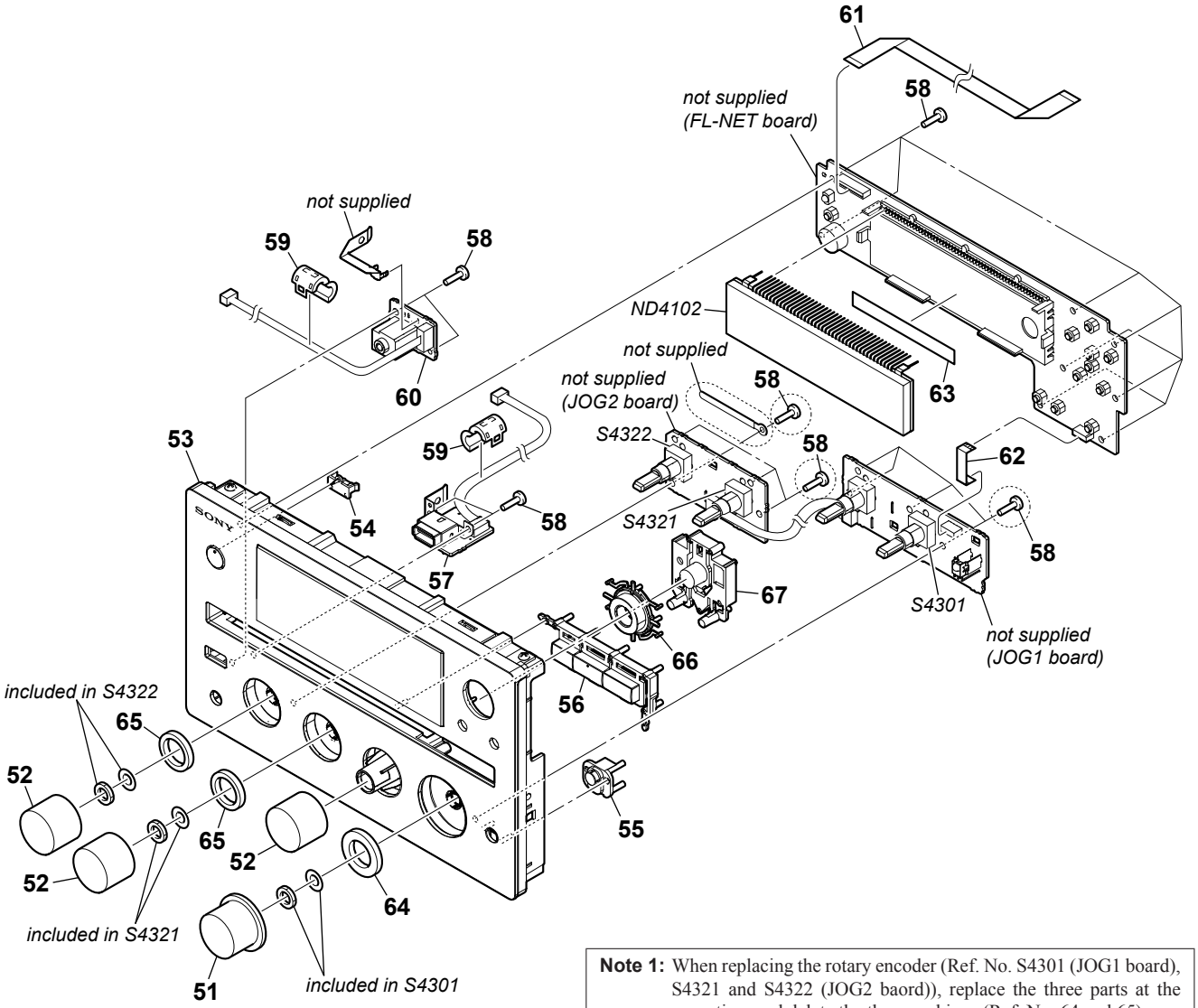

Note 1: When replacing the rotary encoder (Ref. No. S4301 (JOG1 board), S4321 and S4322 (JOG2 baord)), replace the three parts at the same time and delete the three cushions (Ref. No. 64 and 65).

Note 2: Screw surrounded with a dotted line circle may not be attached. Coating clip surrounded with a dotted line circle may differ in the illustration and the attachment position.

Ref. No.	Part No.	Description	Remark
51	X-2581-078-1	KNOB (VOLUME) ASSY	
52	X-2581-077-1	KNOB (FUNCTION) ASSY	
53	X-2582-944-1	PANEL (FRONT NW) ASSY (G2NiP)	
53	X-2582-945-1	PANEL (FRONT NW) ASSY (G2BNiP: AEP, UK)	
53	X-2582-946-1	PANEL (FRONT NW) ASSY (G2BNiP: Australian)	
54	4-275-195-01	INDICATOR	
55	4-275-196-01	WINDOW (IR)	
56	4-275-190-01	BUTTON (EJECT) (⏏, ▶II, ■)	
57	A-1820-896-A	USB BOARD, COMPLETE	
58	3-087-053-01	+BVTP2.6 (3CR)	
59	1-500-082-11	CLAMP, SLEEVE FERRITE	
60	A-1820-897-A	HP BOARD, COMPLETE	

Ref. No.	Part No.	Description	Remark
61	1-839-673-21	CABLE, FLEXIBLE FLAT (19 CORE)	
62	1-839-489-21	CABLE, FLEXIBLE FLAT (7 CORE)	
63	4-154-640-01	SHEET (FL HOLDER), ADHESIVE	
64	4-300-584-01	CUSHION (KNOB VOLUME)	
65	4-300-585-01	CUSHION (KNOB FUNCTION)	
66	X-2583-274-1	BUTTON (TUNING NW) ASSY (⇧, ⇩)	
67	4-275-273-01	BUTTON (ENTER NW) (ENTER)	
ND4102	1-811-488-11	INDICATOR TUBE, FLUORESCENT	
S4301	1-418-725-51	ENCODER, ROTARY (12 TYPE) (VOLUME)	
S4321	1-418-725-51	ENCODER, ROTARY (12 TYPE) (TONE TREBLE)	
S4322	1-418-725-51	ENCODER, ROTARY (12 TYPE) (TONE BASS)	

6-3. REAR PANEL SECTION

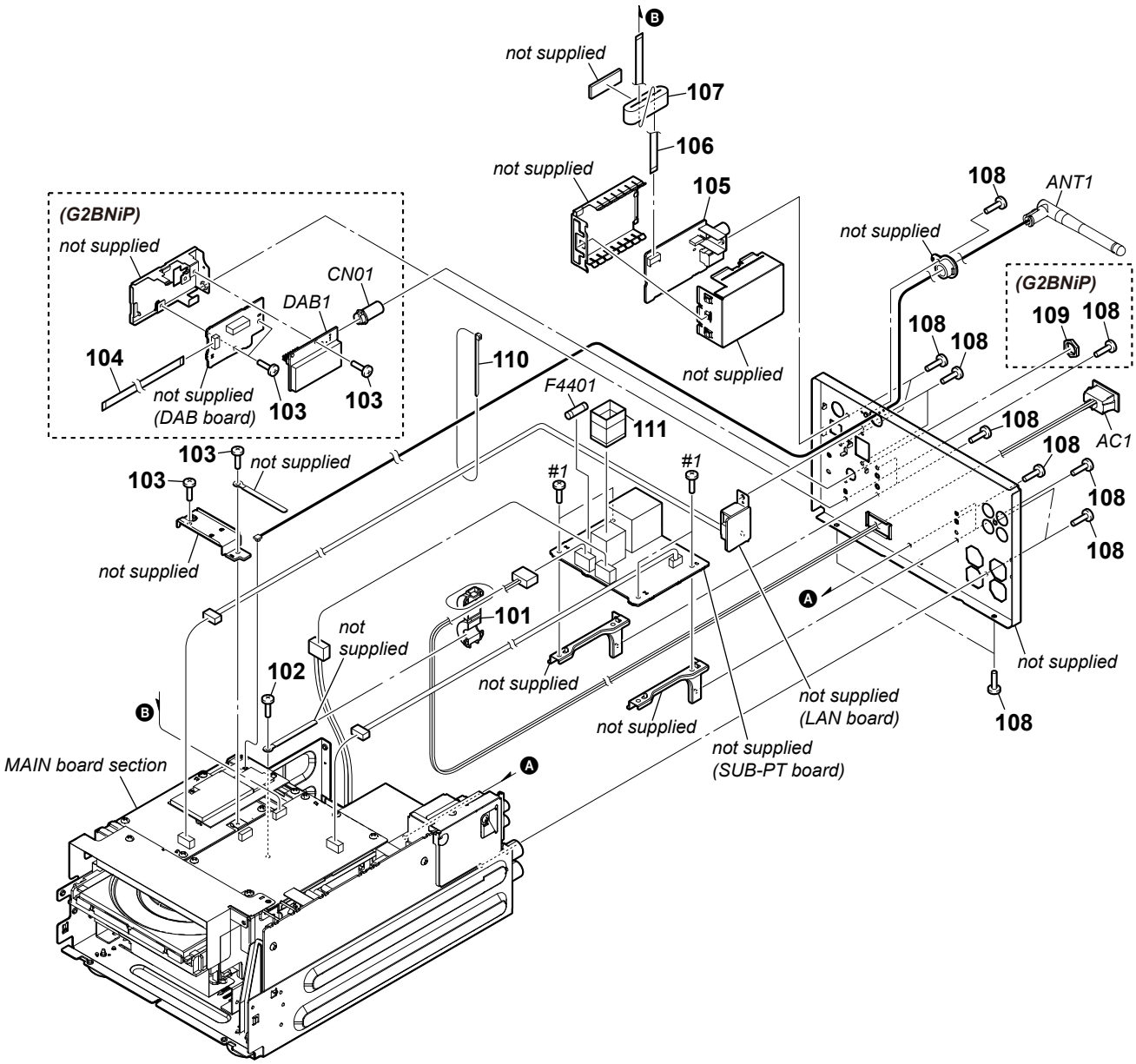

Ref. No.	Part No.	Description	Remark
101	1-481-530-21	FILTER, CLAMP (FERRITE CORE)	
102	3-077-331-21	+BV3 (3-CR)	
103	3-087-053-01	+BVTP2.6 (3CR)	
104	1-839-670-21	CABLE, FLEXIBLE FLAT (8 CORE) (G2BNiP)	
105	A-1820-895-A	TUNER BOARD, COMPLETE	
106	1-839-671-21	CABLE, FLEXIBLE FLAT (9 CORE)	
107	1-457-413-11	CORE, FERRITE	
108	3-704-515-32	SCREW (BV/RING)	
109	2-650-108-01	NUT (G2BNiP)	

Ref. No.	Part No.	Description	Remark
110	3-655-653-11	BAND (TAITON), BINDING	
111	4-297-611-02	SHEET, SUB PT	
⚠ AC1	1-697-045-11	AC INLET (2P)	
ANT1	1-754-804-11	ANTENNA, 2.4 GHZ	
CN01	1-820-441-11	CONNECTOR, COAXIAL (F TYPE) (G2BNiP)	
DAB1	1-489-807-11	MODULE (DAB TUNER) (G2BNiP)	
⚠ F4401	1-532-504-33	FUSE (T 4 AL/250 V)	
#1	7-685-646-71	SCREW +BVTP 3X8 TYPE2 IT-3	

6-4. MAIN BOARD SECTION

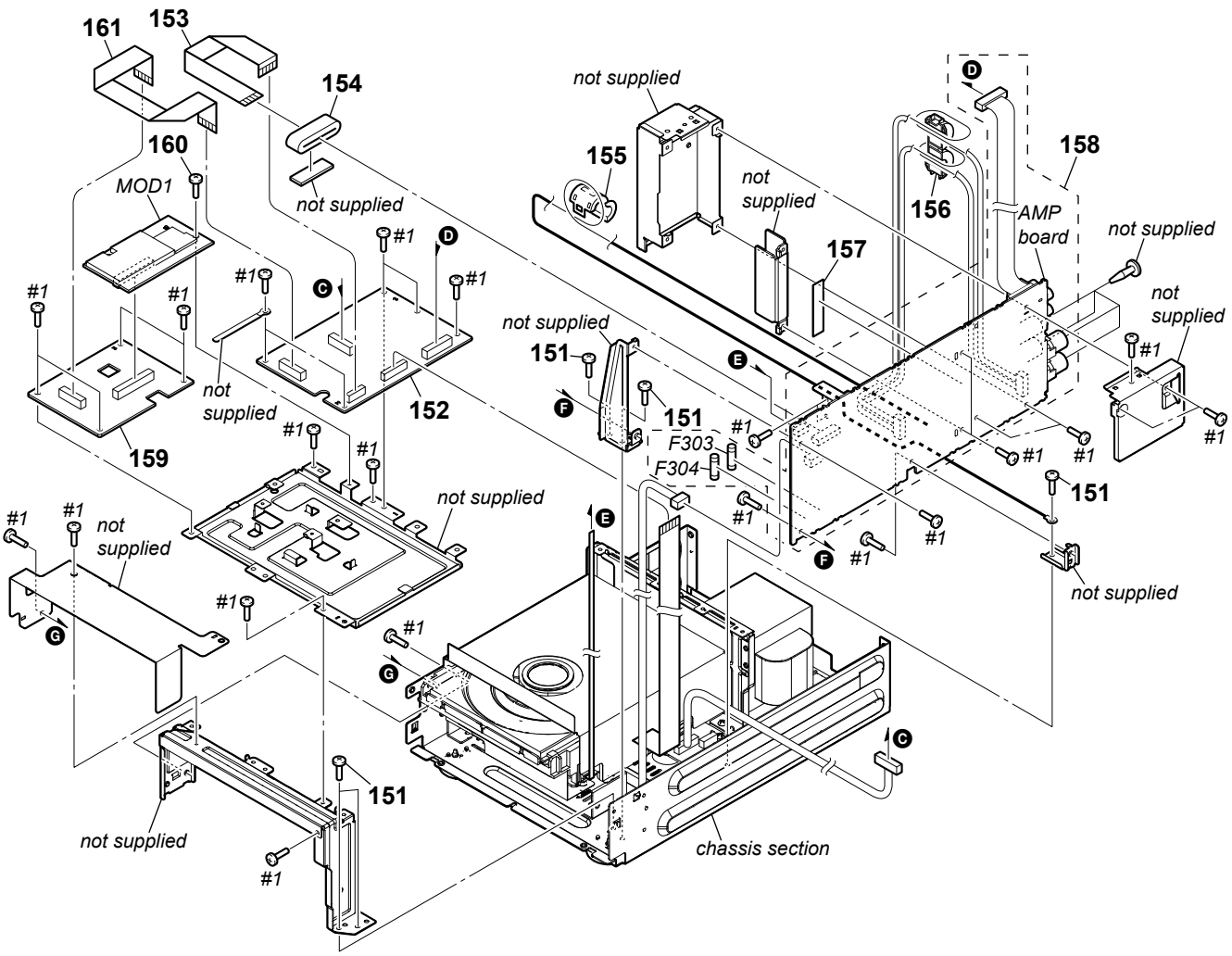

Ref. No.	Part No.	Description	Remark
151	3-077-331-21	+BV3 (3-CR)	
152	A-1823-064-A	MAIN BOARD, COMPLETE (G2NiP)	
152	A-1823-068-A	MAIN BOARD, COMPLETE (G2BNiP: AEP, UK)	
152	A-1847-083-A	MAIN BOARD, COMPLETE (G2BNiP: Australian)	
153	1-839-672-21	CABLE, FLEXIBLE FLAT (15 CORE)	
154	1-457-413-11	CORE, FERRITE	
155	1-500-082-11	CLAMP, SLEEVE FERRITE	
156	1-481-530-21	FILTER, CLAMP (FERRITE CORE)	
157	4-275-263-01	SHEET (RADIATION)	

Ref. No.	Part No.	Description	Remark
158	A-1820-948-A	AMP BOARD, COMPLETE	
159	A-1847-087-A	NET BOARD, COMPLETE	
160	3-087-053-01	+BVTP2.6 (3CR)	
161	1-839-674-21	CABLE, FLEXIBLE FLAT (21 CORE)	
⚠ F303	1-532-504-33	FUSE (T 4 AL/250 V)	
⚠ F304	1-532-504-33	FUSE (T 4 AL/250 V)	
MOD1	A-1861-411-A	MODULE (SERVICE) (WIRELESS LAN MODULE)	
#1	7-685-646-71	SCREW +BVTP 3X8 TYPE2 IT-3	

6-5. CHASSIS SECTION

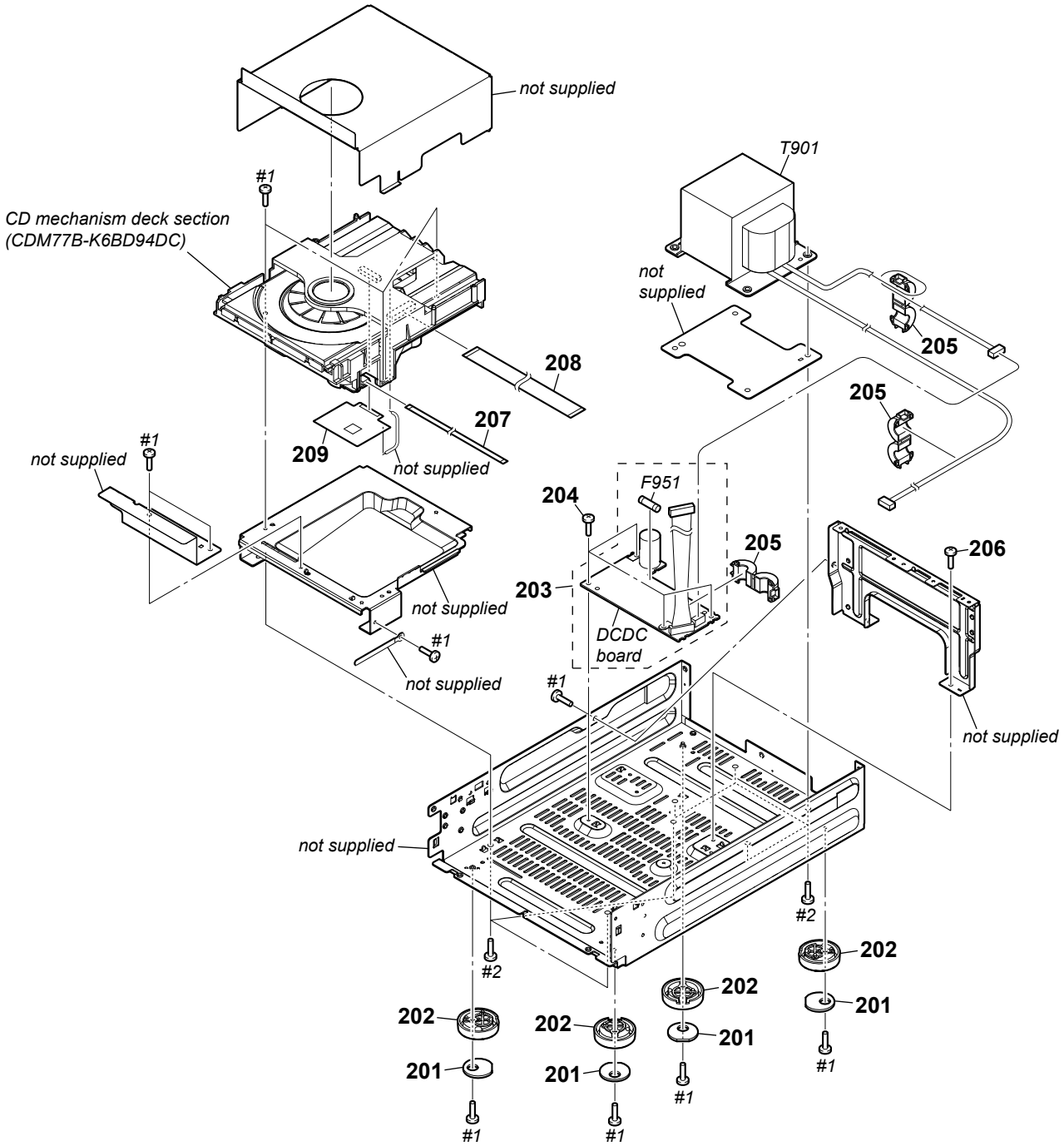

Ref. No.	Part No.	Description	Remark
201	4-275-208-01	CUSHION (FOOT)	
202	4-275-207-01	FOOT	
203	A-1820-949-A	DCDC BOARD, COMPLETE	
204	3-077-331-01	+BV3 (3-CR)	
205	1-481-530-21	FILTER, CLAMP (FERRITE CORE)	
206	3-077-331-21	+BV3 (3-CR)	
207	1-832-534-21	CABLE, FLEXIBLE FLAT (5 CORE)	
208	1-832-615-21	CABLE, FLEXIBLE FLAT (21 CORE)	
209	4-412-917-01	SHEET, CD	
⚠ F951	1-532-504-33	FUSE (T 4 AL/250 V)	
⚠ T901	1-697-042-11	TRANSFORMER, POWER (Australian)	
⚠ T901	1-697-044-11	TRANSFORMER, POWER (AEP, UK)	
#1	7-685-646-71	SCREW +BVTP 3X8 TYPE2 IT-3	
#2	7-685-881-09	SCREW +BVTT 4X8 (S)	

6-6. CD MECHANISM DECK SECTION (CDM77B-K6BD94DC)

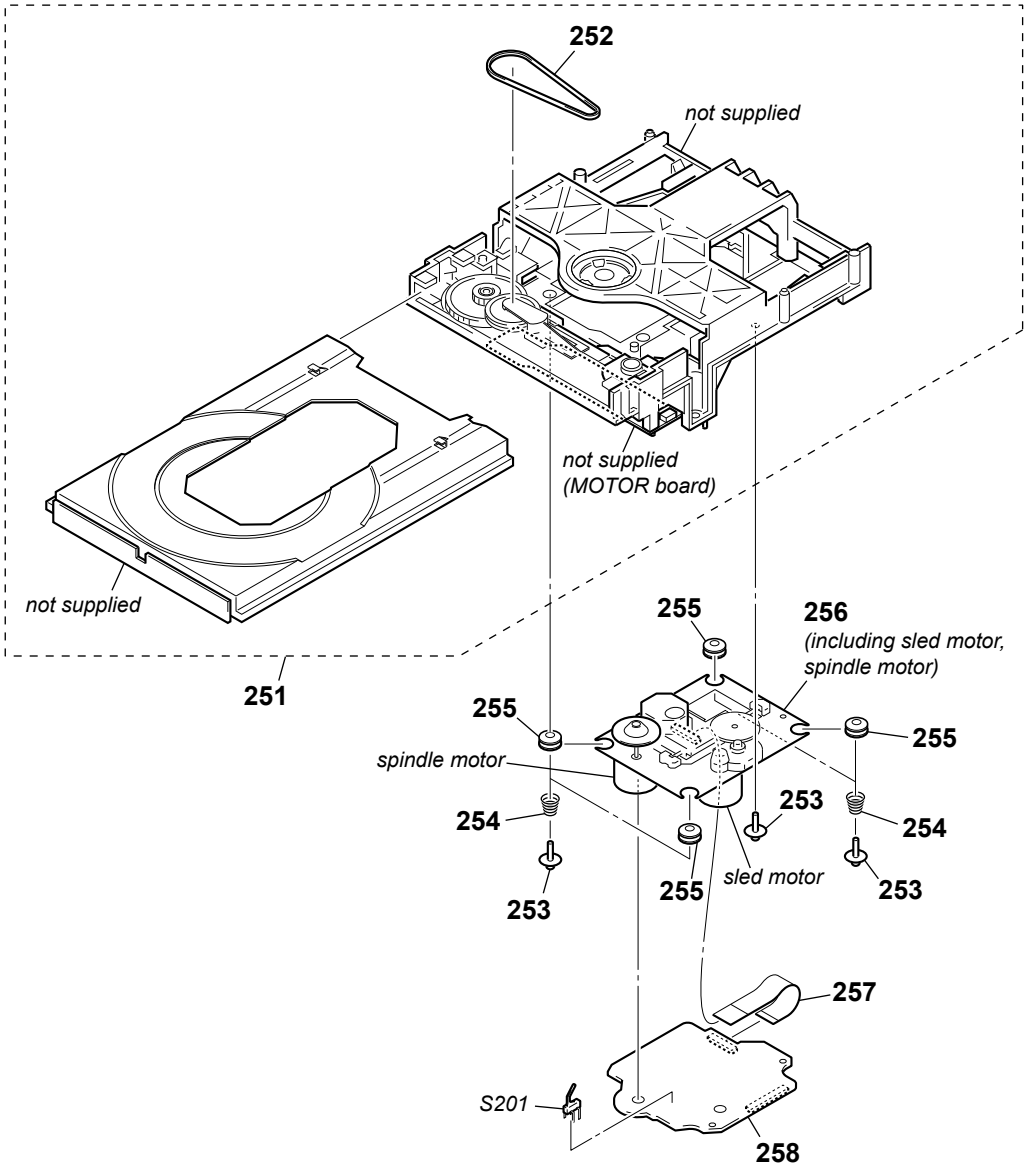

Ref. No.	Part No.	Description	Remark
251	A-1242-967-B	LOADING (BK) ASSY (Including MOTOR board)	
252	3-080-478-01	BELT	
253	4-985-672-01	SCREW (+PTPWHM2.6), FLOATING	
254	4-156-130-01	SPRING, CONE	
255	4-229-005-41	INSULATOR	
⚠ 256	A-4735-357-A	BASE ASSY, OP (KSM-213D) (Including sled motor, spindle motor)	
257	1-834-268-21	WIRE (FLAT TYPE) (16 CORE)	
258	A-1857-582-A	BD94DC BOARD, COMPLETE	
S201	1-771-853-11	SWITCH, DETECTION (LIMIT)	

AMP

SECTION 7
ELECTRICAL PARTS LIST

Note:
- Due to standardization, replacements in the parts list may be different from the parts specified in the diagrams or the components used on the set.
- -XX and -X mean standardized parts, so they may have some difference from the original one.
- Items marked "*" are not stocked since they are seldom required for routine service. Some delay should be anticipated when ordering these items.
- RESISTORS
  All resistors are in ohms.
  METAL: Metal-film resistor.
  METAL OXIDE: Metal oxide-film resistor.
  F: nonflammable
- CAPACITORS
  uF: μF
- COILS
  uH: μH
- SEMICONDUCTORS
  In each case, u: μ, for example:
  uA. . : μA. . , uPA. . , μPA. . ,
  uPB. . : μPB. . , uPC. . , μPC. . ,
  uPD. . : μPD. .
- Abbreviation
  AUS : Ausralian model

When indicating parts by reference number, please include the board name.

The components identified by mark ⚠ or dotted line with mark ⚠ are critical for safety.
Replace only with part number specified.

Ref. No.	Part No.	Description			Remark
	A-1820-948-A	AMP BOARD, COMPLETE			
		**********			
		< CAPACITOR >			
C101	1-104-658-91	ELECT	100uF	20%	10V
C102	1-104-658-91	ELECT	100uF	20%	10V
C103	1-107-826-11	CERAMIC CHIP	0.1uF	10%	16V
C104	1-107-826-11	CERAMIC CHIP	0.1uF	10%	16V
C105	1-164-360-11	CERAMIC CHIP	0.1uF		16V
C107	1-104-658-91	ELECT	100uF	20%	10V
C108	1-104-658-91	ELECT	100uF	20%	10V
C109	1-107-826-11	CERAMIC CHIP	0.1uF	10%	16V
C110	1-107-826-11	CERAMIC CHIP	0.1uF	10%	16V
C111	1-165-908-11	CERAMIC CHIP	1uF	10%	10V
C114	1-137-909-91	CERAMIC CHIP	0.22uF	10%	35V
C115	1-137-909-91	CERAMIC CHIP	0.22uF	10%	35V
C124	1-126-951-11	ELECT	470uF	20%	35V
C125	1-126-951-11	ELECT	470uF	20%	35V
C128	1-137-909-91	CERAMIC CHIP	0.22uF	10%	35V
C129	1-137-909-91	CERAMIC CHIP	0.22uF	10%	35V
C130	1-126-947-11	ELECT	47uF	20%	35V
C131	1-126-947-11	ELECT	47uF	20%	35V
C132	1-162-917-11	CERAMIC CHIP	15PF	5%	50V
C133	1-162-925-11	CERAMIC CHIP	68PF	5%	50V
C134	1-162-917-11	CERAMIC CHIP	15PF	5%	50V
C135	1-162-925-11	CERAMIC CHIP	68PF	5%	50V
C137	1-107-826-11	CERAMIC CHIP	0.1uF	10%	16V
C138	1-107-826-11	CERAMIC CHIP	0.1uF	10%	16V
C139	1-100-672-11	CERAMIC CHIP	10uF	20%	16V
C140	1-126-923-91	ELECT	220uF	20%	10V
C141	1-126-923-91	ELECT	220uF	20%	10V
C142	1-162-961-11	CERAMIC CHIP	330PF	10%	50V
C143	1-100-597-91	CERAMIC CHIP	0.1uF	10%	25V
C144	1-100-597-91	CERAMIC CHIP	0.1uF	10%	25V
C145	1-162-961-11	CERAMIC CHIP	330PF	10%	50V
C146	1-162-970-11	CERAMIC CHIP	0.01uF	10%	25V
C147	1-100-703-91	CERAMIC CHIP	10uF	10%	25V
C152	1-162-917-11	CERAMIC CHIP	15PF	5%	50V
C153	1-162-925-11	CERAMIC CHIP	68PF	5%	50V
C154	1-100-703-91	CERAMIC CHIP	10uF	10%	25V
C155	1-137-909-91	CERAMIC CHIP	0.22uF	10%	35V
C156	1-137-909-91	CERAMIC CHIP	0.22uF	10%	35V
C157	1-126-947-11	ELECT	47uF	20%	35V
C158	1-126-947-11	ELECT	47uF	20%	35V
C159	1-107-826-11	CERAMIC CHIP	0.1uF	10%	16V
C160	1-126-968-11	ELECT	100uF	20%	50V
C161	1-126-964-11	ELECT	10uF	20%	50V
C162	1-126-964-11	ELECT	10uF	20%	50V
C163	1-137-909-91	CERAMIC CHIP	0.22uF	10%	35V
C164	1-137-909-91	CERAMIC CHIP	0.22uF	10%	35V
C165	1-137-909-91	CERAMIC CHIP	0.22uF	10%	35V
C166	1-137-909-91	CERAMIC CHIP	0.22uF	10%	35V
C167	1-107-935-11	ELECT	330uF	20%	100V
C168	1-107-935-11	ELECT	330uF	20%	100V
C169	1-100-623-91	CERAMIC CHIP	0.1uF	10%	100V
C170	1-100-623-91	CERAMIC CHIP	0.1uF	10%	100V
C171	1-162-917-11	CERAMIC CHIP	15PF	5%	50V
C172	1-162-925-11	CERAMIC CHIP	68PF	5%	50V
C177	1-165-176-11	CERAMIC CHIP	0.047uF	10%	16V
C178	1-165-176-11	CERAMIC CHIP	0.047uF	10%	16V
C179	1-165-176-11	CERAMIC CHIP	0.047uF	10%	16V
C180	1-165-176-11	CERAMIC CHIP	0.047uF	10%	16V
C204	1-107-826-11	CERAMIC CHIP	0.1uF	10%	16V
C205	1-107-826-11	CERAMIC CHIP	0.1uF	10%	16V
C208	1-107-826-11	CERAMIC CHIP	0.1uF	10%	16V
C209	1-107-826-11	CERAMIC CHIP	0.1uF	10%	16V
C210	1-107-826-11	CERAMIC CHIP	0.1uF	10%	16V
C211	1-107-826-11	CERAMIC CHIP	0.1uF	10%	16V
C220	1-107-826-11	CERAMIC CHIP	0.1uF	10%	16V
C221	1-165-621-91	CERAMIC CHIP	0.1uF		50V
C222	1-107-826-11	CERAMIC CHIP	0.1uF	10%	16V
C223	1-115-416-11	CERAMIC CHIP	0.001uF	5%	25V
C225	1-162-964-11	CERAMIC CHIP	0.001uF	10%	50V
C226	1-162-964-11	CERAMIC CHIP	0.001uF	10%	50V
C227	1-162-964-11	CERAMIC CHIP	0.001uF	10%	50V
C228	1-162-964-11	CERAMIC CHIP	0.001uF	10%	50V
C229	1-107-826-11	CERAMIC CHIP	0.1uF	10%	16V
C301	1-115-416-11	CERAMIC CHIP	0.001uF	5%	25V
C302	1-115-416-11	CERAMIC CHIP	0.001uF	5%	25V
C303	1-115-416-11	CERAMIC CHIP	0.001uF	5%	25V
C308	1-130-777-00	MYLAR	0.1uF	5%	100V
C309	1-130-777-00	MYLAR	0.1uF	5%	100V
C317	1-116-988-11	ELECT	4700uF	20%	35V
C318	1-116-988-11	ELECT	4700uF	20%	35V
C1001	1-162-927-11	CERAMIC CHIP	100PF	5%	50V
C1002	1-162-927-11	CERAMIC CHIP	100PF	5%	50V
C1003	1-162-968-11	CERAMIC CHIP	0.0047uF	10%	50V
C1004	1-100-566-91	CERAMIC CHIP	0.1uF	10%	25V
C1102	1-162-962-11	CERAMIC CHIP	470PF	10%	50V
C1103	1-124-917-11	ELECT	33uF	20%	63V

Ref. No.	Part No.	Description				Remark
C1104	1-162-966-11	CERAMIC CHIP	0.0022uF	10%	50V	
C1105	1-162-966-11	CERAMIC CHIP	0.0022uF	10%	50V	
C1106	1-162-964-11	CERAMIC CHIP	0.001uF	10%	50V	
C1107	1-114-236-21	CERAMIC CHIP	22uF	10%	25V	
C1108	1-100-598-11	MYLAR	1uF	5%	250V	
C1109	1-131-696-11	FILM	0.22uF	5%	50V	
C1110	1-131-696-11	FILM	0.22uF	5%	50V	
C1115	1-162-917-11	CERAMIC CHIP	15PF	5%	50V	
C1116	1-162-925-11	CERAMIC CHIP	68PF	5%	50V	
C1117	1-162-917-11	CERAMIC CHIP	15PF	5%	50V	
C1118	1-162-925-11	CERAMIC CHIP	68PF	5%	50V	
C1119	1-162-917-11	CERAMIC CHIP	15PF	5%	50V	
C1120	1-162-925-11	CERAMIC CHIP	68PF	5%	50V	
C1122	1-104-658-91	ELECT	100uF	20%	10V	
C1123	1-162-925-11	CERAMIC CHIP	68PF	5%	50V	
C1124	1-162-917-11	CERAMIC CHIP	15PF	5%	50V	
C1125	1-162-925-11	CERAMIC CHIP	68PF	5%	50V	
C1126	1-162-917-11	CERAMIC CHIP	15PF	5%	50V	
C1128	1-162-970-11	CERAMIC CHIP	0.01uF	10%	25V	
C1130	1-126-044-11	ELECT	1uF	20%	50V	
C1132	1-107-826-11	CERAMIC CHIP	0.1uF	10%	16V	
C2001	1-162-927-11	CERAMIC CHIP	100PF	5%	50V	
C2002	1-162-927-11	CERAMIC CHIP	100PF	5%	50V	
C2003	1-162-968-11	CERAMIC CHIP	0.0047uF	10%	50V	
C2004	1-100-566-91	CERAMIC CHIP	0.1uF	10%	25V	
C2102	1-162-962-11	CERAMIC CHIP	470PF	10%	50V	
C2103	1-124-917-11	ELECT	33uF	20%	63V	
C2104	1-162-966-11	CERAMIC CHIP	0.0022uF	10%	50V	
C2105	1-162-966-11	CERAMIC CHIP	0.0022uF	10%	50V	
C2106	1-162-964-11	CERAMIC CHIP	0.001uF	10%	50V	
C2107	1-114-236-21	CERAMIC CHIP	22uF	10%	25V	
C2108	1-100-598-11	MYLAR	1uF	5%	250V	
C2109	1-131-696-11	FILM	0.22uF	5%	50V	
C2110	1-131-696-11	FILM	0.22uF	5%	50V	
C2115	1-162-917-11	CERAMIC CHIP	15PF	5%	50V	
C2116	1-162-925-11	CERAMIC CHIP	68PF	5%	50V	
C2117	1-162-917-11	CERAMIC CHIP	15PF	5%	50V	
C2118	1-162-925-11	CERAMIC CHIP	68PF	5%	50V	
C2119	1-162-917-11	CERAMIC CHIP	15PF	5%	50V	
C2120	1-162-925-11	CERAMIC CHIP	68PF	5%	50V	
C2122	1-104-658-91	ELECT	100uF	20%	10V	
C2123	1-162-925-11	CERAMIC CHIP	68PF	5%	50V	
C2124	1-162-917-11	CERAMIC CHIP	15PF	5%	50V	
C2125	1-162-925-11	CERAMIC CHIP	68PF	5%	50V	
C2126	1-162-917-11	CERAMIC CHIP	15PF	5%	50V	
C2128	1-162-970-11	CERAMIC CHIP	0.01uF	10%	25V	
C2130	1-126-044-11	ELECT	1uF	20%	50V	
C2131	1-107-826-11	CERAMIC CHIP	0.1uF	10%	16V	
C2132	1-107-826-11	CERAMIC CHIP	0.1uF	10%	16V	
C2133	1-162-968-11	CERAMIC CHIP	0.0047uF	10%	50V	
		< CONNECTOR >				
CN102	1-784-374-51	CONNECTOR, FFC/FPC 15P				
CN103	1-779-273-11	CONNECTOR, FFC (LIF (NON-ZIF)) 5P				
* CN301	1-564-104-00	PIN, CONNECTOR (3.96 mm PITCH) 3P				
		< DIODE >				
D105	8-719-081-97	DIODE MMDL914T1				
D106	8-719-081-97	DIODE MMDL914T1				
D107	8-719-081-97	DIODE MMDL914T1				

Ref. No.	Part No.	Description	Remark
D108	8-719-081-97	DIODE MMDL914T1	
D109	6-501-768-01	DIODE MAZ8120GMLS0	
D110	8-719-053-18	DIODE 1SR154-400TE-25	
D301	6-502-994-01	DIODE D10XB60 F	
D302	6-500-848-01	DIODE MC2840-T112-1	
D303	6-502-961-01	DIODE DA2J10100L	
D304	6-502-619-01	DIODE 1N5402-C532-2	
D305	6-502-619-01	DIODE 1N5402-C532-2	
D306	6-502-619-01	DIODE 1N5402-C532-2	
D307	6-502-619-01	DIODE 1N5402-C532-2	
D308	6-502-619-01	DIODE 1N5402-C532-2	
D309	6-502-619-01	DIODE 1N5402-C532-2	
		< EARTH TERMINAL >	
ET101	1-780-482-11	EARTH TERMINAL	
ET102	1-780-482-11	EARTH TERMINAL	
ET201	1-780-482-11	EARTH TERMINAL	
ET301	1-780-482-11	EARTH TERMINAL	
ET302	1-780-482-11	EARTH TERMINAL	
ET303	1-780-482-11	EARTH TERMINAL	
		< FUSE >	
⚠ F303	1-532-504-32	FUSE (T 4 AL/250 V)	
⚠ F304	1-532-504-32	FUSE (T 4 AL/250 V)	
		< FERRITE BEAD >	
FB103	1-469-324-21	FERRITE, EMI (SMD) (2012)	
FB104	1-469-324-21	FERRITE, EMI (SMD) (2012)	
		< FUSE HOLDER >	
⚠ FH305	1-533-217-41	FUSE HOLDER	
⚠ FH306	1-533-217-41	FUSE HOLDER	
⚠ FH307	1-533-217-41	FUSE HOLDER	
⚠ FH308	1-533-217-41	FUSE HOLDER	
		< IC >	
IC101	6-716-981-01	IC NJW1159V (TE2)	
IC102	8-759-598-69	IC BA6956AN	
IC103	8-759-422-21	IC NJM4580V (TE2)	
IC107	(Not supplied)	IC IRS2052M	
IC108	6-713-034-01	IC KIA7812API-U/PF	
IC109	6-712-106-01	IC KIA7912PI	
IC110	6-712-295-01	IC KIA7907PI	
IC111	6-712-294-01	IC KIA7807API-U/PF	
IC112	6-713-031-01	IC KIA7805API-U/PF	
IC113	6-711-998-01	IC KIA7905PI	
		< JACK >	
J302	1-794-981-11	JACK, PIN 4P (AUDIO IN 1, AUDIO IN 2)	
		< JUMPER RESISTOR >	
JS1001	1-216-295-91	SHORT CHIP 0	
JS2001	1-216-295-91	SHORT CHIP 0	
		< COIL >	
L1101	1-456-412-11	COIL, CHOKE 10uH	
L1102	1-456-412-11	COIL, CHOKE 10uH	

Note: IC107 on the AMP board cannot exchange with single. When this part is damaged, exchange the complete mounted board.

AMP

Ref. No.	Part No.	Description				Remark
		< TRANSISTOR >				
Q018	8-729-038-23	TRANSISTOR	RT1N141C-TP-1			
Q104	8-729-620-07	TRANSISTOR	2SC3052EF-T1-LEF			
Q108	8-729-056-46	TRANSISTOR	2SC5053T100Q			
Q112	8-729-027-52	TRANSISTOR	DTC124EKA-T146			
Q113	8-729-027-31	TRANSISTOR	DTA124EKA-T146			
Q1101	(Not supplied)	FET	IRF6665TR1PBF			
Q1102	(Not supplied)	FET	IRF6665TR1PBF			
Q2101	(Not supplied)	FET	IRF6665TR1PBF			
Q2102	(Not supplied)	FET	IRF6665TR1PBF			
Q2103	8-729-043-90	TRANSISTOR	IMX9T110			
		< RESISTOR >				
R012	1-216-864-11	SHORT CHIP	0			
R013	1-216-864-11	SHORT CHIP	0			
R014	1-216-864-11	SHORT CHIP	0			
R019	1-216-833-11	METAL CHIP	10K	5%	1/10W	
R020	1-216-833-11	METAL CHIP	10K	5%	1/10W	
R021	1-216-845-11	METAL CHIP	100K	5%	1/10W	
R101	1-216-797-11	METAL CHIP	10	5%	1/10W	
R102	1-216-797-11	METAL CHIP	10	5%	1/10W	
R103	1-216-864-11	SHORT CHIP	0			
R104	1-216-864-11	SHORT CHIP	0			
R105	1-216-864-11	SHORT CHIP	0			
R106	1-216-864-11	SHORT CHIP	0			
R107	1-216-864-11	SHORT CHIP	0			
R110	1-216-864-11	SHORT CHIP	0			
R111	1-216-864-11	SHORT CHIP	0			
R112	1-216-821-11	METAL CHIP	1K	5%	1/10W	
R113	1-216-822-11	METAL CHIP	1.2K	5%	1/10W	
R123	1-216-829-11	METAL CHIP	4.7K	5%	1/10W	
R124	1-216-797-11	METAL CHIP	10	5%	1/10W	
R125	1-216-797-11	METAL CHIP	10	5%	1/10W	
R126	1-216-797-11	METAL CHIP	10	5%	1/10W	
R127	1-216-797-11	METAL CHIP	10	5%	1/10W	
R131	1-216-833-11	METAL CHIP	10K	5%	1/10W	
R132	1-216-829-11	METAL CHIP	4.7K	5%	1/10W	
R135	1-216-864-11	SHORT CHIP	0			
R163	1-216-833-11	METAL CHIP	10K	5%	1/10W	
R164	1-216-825-11	METAL CHIP	2.2K	5%	1/10W	
R165	1-216-832-11	METAL CHIP	8.2K	5%	1/10W	
R166	1-216-821-11	METAL CHIP	1K	5%	1/10W	
R168	1-216-821-11	METAL CHIP	1K	5%	1/10W	
R169	1-216-797-11	METAL CHIP	10	5%	1/10W	
R177	1-216-833-11	METAL CHIP	10K	5%	1/10W	
R178	1-216-864-11	SHORT CHIP	0			
R179	1-216-793-11	METAL CHIP	4.7	5%	1/10W	
R180	1-216-793-11	METAL CHIP	4.7	5%	1/10W	
R181	1-216-793-11	METAL CHIP	4.7	5%	1/10W	
R182	1-216-793-11	METAL CHIP	4.7	5%	1/10W	
R183	1-216-837-11	METAL CHIP	22K	5%	1/10W	
R184	1-216-837-11	METAL CHIP	22K	5%	1/10W	
R185	1-216-833-11	METAL CHIP	10K	5%	1/10W	
R186	1-216-833-11	METAL CHIP	10K	5%	1/10W	
R187	1-216-827-11	METAL CHIP	3.3K	5%	1/10W	
R190	1-216-827-11	METAL CHIP	3.3K	5%	1/10W	
R191	1-216-797-11	METAL CHIP	10	5%	1/10W	
R192	1-216-797-11	METAL CHIP	10	5%	1/10W	
R193	1-216-797-11	METAL CHIP	10	5%	1/10W	
R194	1-216-797-11	METAL CHIP	10	5%	1/10W	
R195	1-216-837-11	METAL CHIP	22K	5%	1/10W	
⚠ R196	1-215-895-71	METAL OXIDE	3.3K	5%	2W	F
⚠ R197	1-215-895-71	METAL OXIDE	3.3K	5%	2W	F
R198	1-248-373-11	RES-CHIP	1	1%	1/2W	
R199	1-248-373-11	RES-CHIP	1	1%	1/2W	
R223	1-216-864-11	SHORT CHIP	0			
R224	1-216-833-11	METAL CHIP	10K	5%	1/10W	
R225	1-216-833-11	METAL CHIP	10K	5%	1/10W	
R226	1-216-833-11	METAL CHIP	10K	5%	1/10W	
R233	1-216-845-11	METAL CHIP	100K	5%	1/10W	
R250	1-216-864-11	SHORT CHIP	0			
R310	1-216-864-11	SHORT CHIP	0			
R311	1-216-864-11	SHORT CHIP	0			
R1001	1-216-825-11	METAL CHIP	2.2K	5%	1/10W	
R1002	1-216-841-11	METAL CHIP	47K	5%	1/10W	
R1003	1-216-825-11	METAL CHIP	2.2K	5%	1/10W	
R1004	1-216-845-11	METAL CHIP	100K	5%	1/10W	
R1101	1-216-864-11	SHORT CHIP	0			
R1108	1-260-113-41	CARBON	15K	5%	1/2W	
R1113	1-249-210-11	CARBON	1K	5%	1/3W	
R1115	1-216-812-11	METAL CHIP	180	5%	1/10W	
R1116	1-218-867-11	METAL CHIP	6.8K	0.5%	1/10W	
⚠ R1117	1-215-857-31	METAL OXIDE	10	5%	1W	F
R1119	1-260-107-41	CARBON	4.7K	5%	1/2W	
R1120	1-216-864-11	SHORT CHIP	0			
R1123	1-249-218-11	CARBON	2.2K	5%	1/3W	
R1126	1-249-186-31	CARBON	100	5%	1/3W	
R1127	1-216-864-11	SHORT CHIP	0			
R1128	1-249-489-11	CARBON	22K	5%	1/2W	
R1129	1-260-099-41	CARBON	1K	5%	1/2W	
R1133	1-216-829-11	METAL CHIP	4.7K	5%	1/10W	
R1134	1-216-845-11	METAL CHIP	100K	5%	1/10W	
R2001	1-216-825-11	METAL CHIP	2.2K	5%	1/10W	
R2002	1-216-841-11	METAL CHIP	47K	5%	1/10W	
R2003	1-216-825-11	METAL CHIP	2.2K	5%	1/10W	
R2004	1-216-845-11	METAL CHIP	100K	5%	1/10W	
R2101	1-216-864-11	SHORT CHIP	0			
R2108	1-260-113-41	CARBON	15K	5%	1/2W	
R2113	1-249-210-11	CARBON	1K	5%	1/3W	
R2115	1-216-812-11	METAL CHIP	180	5%	1/10W	
R2116	1-218-867-11	METAL CHIP	6.8K	0.5%	1/10W	
⚠ R2117	1-215-857-31	METAL OXIDE	10	5%	1W	F
R2119	1-260-107-41	CARBON	4.7K	5%	1/2W	
R2120	1-216-864-11	SHORT CHIP	0			
R2123	1-249-218-11	CARBON	2.2K	5%	1/3W	
R2126	1-249-186-31	CARBON	100	5%	1/3W	
R2127	1-216-864-11	SHORT CHIP	0			
R2128	1-249-489-11	CARBON	22K	5%	1/2W	
R2129	1-260-099-41	CARBON	1K	5%	1/2W	
R2133	1-216-829-11	METAL CHIP	4.7K	5%	1/10W	
R2135	1-216-845-11	METAL CHIP	100K	5%	1/10W	
		< TERMINAL >				
TB301	1-780-746-11	TERMINAL BOARD (SP) (4P) (SPEAKERS)				
		< THERMISTOR >				
TH101	1-805-553-21	THERMISTOR, POSITIVE				

****

Note: Q1101, Q1102, Q2101 and Q2102 on the AMP board cannot exchange with single. When these parts are damaged, exchange the complete mounted board.

BD94DC

Ref. No.	Part No.	Description				Remark
	A-1857-582-A	BD94DC BOARD, COMPLETE **********				
		< CAPACITOR >				
C101	1-164-677-11	CERAMIC CHIP	0.033uF	10%	16V	
C104	1-164-677-11	CERAMIC CHIP	0.033uF	10%	16V	
C106	1-107-826-11	CERAMIC CHIP	0.1uF	10%	16V	
C107	1-107-826-11	CERAMIC CHIP	0.1uF	10%	16V	
C108	1-164-315-11	CERAMIC CHIP	470PF	5%	50V	
C109	1-164-315-11	CERAMIC CHIP	470PF	5%	50V	
C110	1-107-826-11	CERAMIC CHIP	0.1uF	10%	16V	
C111	1-107-826-11	CERAMIC CHIP	0.1uF	10%	16V	
C112	1-162-916-11	CERAMIC CHIP	12PF	5%	50V	
C115	1-162-916-11	CERAMIC CHIP	12PF	5%	50V	
C116	1-107-826-11	CERAMIC CHIP	0.1uF	10%	16V	
C117	1-162-966-11	CERAMIC CHIP	0.0022uF	10%	50V	
C118	1-107-826-11	CERAMIC CHIP	0.1uF	10%	16V	
C121	1-107-826-11	CERAMIC CHIP	0.1uF	10%	16V	
C123	1-107-826-11	CERAMIC CHIP	0.1uF	10%	16V	
C124	1-107-826-11	CERAMIC CHIP	0.1uF	10%	16V	
C125	1-107-826-11	CERAMIC CHIP	0.1uF	10%	16V	
C126	1-107-826-11	CERAMIC CHIP	0.1uF	10%	16V	
C129	1-162-923-11	CERAMIC CHIP	47PF	5%	50V	
C130	1-164-245-11	CERAMIC CHIP	0.015uF	10%	25V	
C132	1-107-826-11	CERAMIC CHIP	0.1uF	10%	16V	
C133	1-107-826-11	CERAMIC CHIP	0.1uF	10%	16V	
C134	1-107-726-91	CERAMIC CHIP	0.01uF	10%	16V	
C135	1-107-826-11	CERAMIC CHIP	0.1uF	10%	16V	
C136	1-107-826-11	CERAMIC CHIP	0.1uF	10%	16V	
C137	1-107-826-11	CERAMIC CHIP	0.1uF	10%	16V	
C138	1-107-726-91	CERAMIC CHIP	0.01uF	10%	16V	
C140	1-162-966-11	CERAMIC CHIP	0.0022uF	10%	50V	
C141	1-107-826-11	CERAMIC CHIP	0.1uF	10%	16V	
C142	1-107-826-11	CERAMIC CHIP	0.1uF	10%	16V	
C143	1-162-964-11	CERAMIC CHIP	0.001uF	10%	50V	
C144	1-107-726-91	CERAMIC CHIP	0.01uF	10%	16V	
C145	1-164-245-11	CERAMIC CHIP	0.015uF	10%	25V	
C146	1-162-925-11	CERAMIC CHIP	68PF	5%	50V	
C148	1-107-826-11	CERAMIC CHIP	0.1uF	10%	16V	
C151	1-165-176-11	CERAMIC CHIP	0.047uF	10%	16V	
C152	1-107-826-11	CERAMIC CHIP	0.1uF	10%	16V	
C153	1-165-176-11	CERAMIC CHIP	0.047uF	10%	16V	
C160	1-117-681-11	ELECT CHIP	100uF	20%	16V	
C201	1-117-681-11	ELECT CHIP	100uF	20%	16V	
C202	1-117-681-11	ELECT CHIP	100uF	20%	16V	
C204	1-107-826-11	CERAMIC CHIP	0.1uF	10%	16V	
C205	1-107-826-11	CERAMIC CHIP	0.1uF	10%	16V	
C206	1-165-908-11	CERAMIC CHIP	1uF	10%	10V	
C207	1-165-908-11	CERAMIC CHIP	1uF	10%	10V	
C301	1-107-826-11	CERAMIC CHIP	0.1uF	10%	16V	
C302	1-137-710-91	CERAMIC CHIP	10uF	20%	6.3V	
C303	1-137-710-91	CERAMIC CHIP	10uF	20%	6.3V	
C307	1-162-964-11	CERAMIC CHIP	0.001uF	10%	50V	
C308	1-165-908-11	CERAMIC CHIP	1uF	10%	10V	
C309	1-117-681-11	ELECT CHIP	100uF	20%	16V	
C401	1-116-108-11	ELECT CHIP	330uF	20%	10V	
C403	1-107-826-11	CERAMIC CHIP	0.1uF	10%	16V	
C405	1-107-826-11	CERAMIC CHIP	0.1uF	10%	16V	
C407	1-107-826-11	CERAMIC CHIP	0.1uF	10%	16V	

Ref. No.	Part No.	Description				Remark
		< CONNECTOR >				
CN202	1-784-833-51	CONNECTOR, FFC (LIF (NON-ZIF)) 21P				
CN301	1-770-425-51	CONNECTOR, FFC/FPC 16P				
		< IC >				
IC101	6-712-082-01	IC TC94A70FG-101				
IC201	6-714-504-01	IC MM3404A15URE				
IC401	6-710-637-01	IC BA5826HFP-E2				
		< TRANSISTOR >				
Q301	6-551-120-01	TRANSISTOR	2SA2119K			
		< RESISTOR >				
R101	1-216-864-11	SHORT CHIP	0			
R103	1-216-813-11	METAL CHIP	220	5%	1/10W	
R104	1-216-833-11	METAL CHIP	10K	5%	1/10W	
R106	1-216-857-11	METAL CHIP	1M	5%	1/10W	
R107	1-216-825-11	METAL CHIP	2.2K	5%	1/10W	
R110	1-216-295-91	SHORT CHIP	0			
R115	1-216-833-11	METAL CHIP	10K	5%	1/10W	
R116	1-216-833-11	METAL CHIP	10K	5%	1/10W	
R117	1-216-809-11	METAL CHIP	100	5%	1/10W	
R118	1-216-809-11	METAL CHIP	100	5%	1/10W	
R119	1-216-833-11	METAL CHIP	10K	5%	1/10W	
R123	1-216-864-11	SHORT CHIP	0			
R127	1-216-835-11	METAL CHIP	15K	5%	1/10W	
R128	1-216-851-11	METAL CHIP	330K	5%	1/10W	
R130	1-216-841-11	METAL CHIP	47K	5%	1/10W	
R136	1-216-830-11	METAL CHIP	5.6K	5%	1/10W	
R137	1-216-864-11	SHORT CHIP	0			
R138	1-216-864-11	SHORT CHIP	0			
R139	1-216-864-11	SHORT CHIP	0			
R140	1-216-809-11	METAL CHIP	100	5%	1/10W	
R146	1-216-845-11	METAL CHIP	100K	5%	1/10W	
R147	1-216-833-11	METAL CHIP	10K	5%	1/10W	
R148	1-216-837-11	METAL CHIP	22K	5%	1/10W	
R149	1-216-864-11	SHORT CHIP	0			
R150	1-216-864-11	SHORT CHIP	0			
R151	1-216-864-11	SHORT CHIP	0			
R152	1-216-864-11	SHORT CHIP	0			
R153	1-216-864-11	SHORT CHIP	0			
R154	1-216-864-11	SHORT CHIP	0			
R156	1-216-809-11	METAL CHIP	100	5%	1/10W	
R157	1-216-809-11	METAL CHIP	100	5%	1/10W	
R201	1-216-295-91	SHORT CHIP	0			
R202	1-216-295-91	SHORT CHIP	0			
R204	1-216-864-11	SHORT CHIP	0			
R205	1-216-809-11	METAL CHIP	100	5%	1/10W	
R210	1-216-809-11	METAL CHIP	100	5%	1/10W	
R211	1-216-809-11	METAL CHIP	100	5%	1/10W	
R212	1-216-809-11	METAL CHIP	100	5%	1/10W	
R213	1-216-809-11	METAL CHIP	100	5%	1/10W	
R214	1-216-809-11	METAL CHIP	100	5%	1/10W	
R215	1-216-809-11	METAL CHIP	100	5%	1/10W	
R216	1-216-809-11	METAL CHIP	100	5%	1/10W	
R217	1-216-809-11	METAL CHIP	100	5%	1/10W	
R218	1-216-845-11	METAL CHIP	100K	5%	1/10W	
R219	1-216-845-11	METAL CHIP	100K	5%	1/10W	
R220	1-216-845-11	METAL CHIP	100K	5%	1/10W	

BD94DC DAB DCDC

Ref. No.	Part No.	Description			Remark
R221	1-216-845-11	METAL CHIP	100K	5%	1/10W
R222	1-216-845-11	METAL CHIP	100K	5%	1/10W
R223	1-216-845-11	METAL CHIP	100K	5%	1/10W
R301	1-216-845-11	METAL CHIP	100K	5%	1/10W
R302	1-216-864-11	SHORT CHIP	0		
R303	1-216-791-11	METAL CHIP	3.3	5%	1/10W
R304	1-218-446-11	METAL CHIP	1	5%	1/10W
R402	1-216-825-11	METAL CHIP	2.2K	5%	1/10W
R405	1-216-833-11	METAL CHIP	10K	5%	1/10W
R408	1-216-825-11	METAL CHIP	2.2K	5%	1/10W
R411	1-216-864-11	SHORT CHIP	0		
R414	1-216-829-11	METAL CHIP	4.7K	5%	1/10W
R415	1-216-841-11	METAL CHIP	47K	5%	1/10W
R416	1-216-864-11	SHORT CHIP	0		
		< VIBRATOR >			
X101	1-814-450-11	QUARTZ CRYSTAL UNITS (16.9344 MHz)			

****

DAB BOARD (G2BNiP)
****

		< CAPACITOR >			
C4001	1-107-826-11	CERAMIC CHIP	0.1uF	10%	16V
C4002	1-124-584-00	ELECT	100uF	20%	10V
C4003	1-165-908-11	CERAMIC CHIP	1uF	10%	10V
C4004	1-115-416-11	CERAMIC CHIP	0.001uF	5%	25V
C4005	1-165-908-11	CERAMIC CHIP	1uF	10%	10V
C4006	1-124-584-00	ELECT	100uF	20%	10V
C4007	1-107-826-11	CERAMIC CHIP	0.1uF	10%	16V
C4008	1-165-908-11	CERAMIC CHIP	1uF	10%	10V
C4009	1-165-908-11	CERAMIC CHIP	1uF	10%	10V
C4011	1-165-908-11	CERAMIC CHIP	1uF	10%	10V
C4012	1-124-584-00	ELECT	100uF	20%	10V
C4017	1-107-826-11	CERAMIC CHIP	0.1uF	10%	16V
C4018	1-107-826-11	CERAMIC CHIP	0.1uF	10%	16V
C4020	1-216-864-11	SHORT CHIP	0		
		< CONNECTOR >			
CN4001	1-779-545-21	CONNECTOR, FFC (LIF (NON-ZIF)) 8P			
CN4002	1-842-778-11	P.W.B CONNECTOR 14P			
		< DIODE >			
D4001	6-502-961-01	DIODE DA2J10100L			
D4002	6-501-119-01	DIODE RR264M-400			
		< IC >			
IC4001	6-711-132-01	IC MM3291CNRE			
		< JUMPER RESISTOR >			
JR1001	1-216-864-11	SHORT CHIP	0		
JR1002	1-216-864-11	SHORT CHIP	0		
		< TRANSISTOR >			
Q4001	6-551-456-01	FET	RTR020P02TL		
Q4002	8-729-029-09	TRANSISTOR	DTC143EUA-T106		
		< RESISTOR >			
R4001	1-216-864-11	SHORT CHIP	0		
R4002	1-216-864-11	SHORT CHIP	0		
R4003	1-216-864-11	SHORT CHIP	0		
R4004	1-216-864-11	SHORT CHIP	0		
R4005	1-216-864-11	SHORT CHIP	0		
R4006	1-216-864-11	SHORT CHIP	0		
R4007	1-216-845-11	METAL CHIP	100K	5%	1/10W
R4008	1-216-833-11	METAL CHIP	10K	5%	1/10W
R4009	1-216-845-11	METAL CHIP	100K	5%	1/10W
R4010	1-216-841-11	METAL CHIP	47K	5%	1/10W
R4012	1-216-864-11	SHORT CHIP	0		
R4013	1-216-864-11	SHORT CHIP	0		

****

A-1820-949-A DCDC BOARD, COMPLETE
****

		< CAPACITOR >			
C951	1-136-165-00	FILM	0.1uF	5%	50V
C952	1-136-165-00	FILM	0.1uF	5%	50V
C953	1-126-944-11	ELECT	3300uF	20%	25V
C954	1-100-566-91	CERAMIC CHIP	0.1uF	10%	25V
C955	1-100-597-91	CERAMIC CHIP	0.1uF	10%	25V
C956	1-100-597-91	CERAMIC CHIP	0.1uF	10%	25V
C958	1-114-599-21	ELECT CHIP	10uF	20%	35V
C959	1-114-599-21	ELECT CHIP	10uF	20%	35V
C960	1-126-941-11	ELECT	470uF	20%	25V
C961	1-162-961-11	CERAMIC CHIP	330PF	10%	50V
C962	1-116-173-91	CERAMIC CHIP	0.0022uF	5%	50V
C963	1-162-967-11	CERAMIC CHIP	0.0033uF	10%	50V
C964	1-115-416-11	CERAMIC CHIP	0.001uF	5%	25V
C965	1-115-416-11	CERAMIC CHIP	0.001uF	5%	25V
C966	1-115-416-11	CERAMIC CHIP	0.001uF	5%	25V
C967	1-100-597-91	CERAMIC CHIP	0.1uF	10%	25V
C968	1-100-597-91	CERAMIC CHIP	0.1uF	10%	25V
C969	1-100-597-91	CERAMIC CHIP	0.1uF	10%	25V
C970	1-162-966-11	CERAMIC CHIP	0.0022uF	10%	50V
C971	1-162-966-11	CERAMIC CHIP	0.0022uF	10%	50V
C972	1-162-966-11	CERAMIC CHIP	0.0022uF	10%	50V
C973	1-162-966-11	CERAMIC CHIP	0.0022uF	10%	50V
C974	1-162-966-11	CERAMIC CHIP	0.0022uF	10%	50V
C975	1-162-966-11	CERAMIC CHIP	0.0022uF	10%	50V
C976	1-126-926-11	ELECT	1000uF	20%	10V
C977	1-124-778-00	ELECT CHIP	22uF	20%	6.3V
C978	1-124-778-00	ELECT CHIP	22uF	20%	6.3V
C980	1-107-826-11	CERAMIC CHIP	0.1uF	10%	16V
C981	1-126-916-11	ELECT	1000uF	20%	6.3V
C982	1-126-941-11	ELECT	470uF	20%	25V
C983	1-126-926-11	ELECT	1000uF	20%	10V
C987	1-114-503-21	CERAMIC CHIP	10uF	20%	50V
C988	1-114-503-21	CERAMIC CHIP	10uF	20%	50V
C989	1-114-503-21	CERAMIC CHIP	10uF	20%	50V
		< CONNECTOR >			
CN952	1-564-507-11	PLUG, CONNECTOR 4P			
		< DIODE >			
D951	6-500-522-21	DIODE 10EDB40-TB3			
D952	6-500-522-21	DIODE 10EDB40-TB3			
D953	6-500-522-21	DIODE 10EDB40-TB3			
D954	6-500-522-21	DIODE 10EDB40-TB3			
D955	6-500-334-01	DIODE MC2836-T112-1			

Ref. No.	Part No.	Description			Remark
D956	6-500-334-01	DIODE MC2836-T112-1			
D957	6-502-969-01	DIODE DZ2J06800L			
D958	6-503-022-01	DIODE DZ2J100M0L			
D959	6-502-969-01	DIODE DZ2J06800L			
D961	6-500-334-01	DIODE MC2836-T112-1			
		< FUSE >			
⚠ F951	1-532-504-33	FUSE (T 4 AL/250 V)			
		< FUSE HOLDER >			
⚠ FH951	1-533-217-41	FUSE HOLDER			
⚠ FH952	1-533-217-41	FUSE HOLDER			
		< IC >			
IC951	6-716-554-11	IC BD9329AEFJ-E2			
IC952	6-716-554-11	IC BD9329AEFJ-E2			
IC953	6-716-554-11	IC BD9329AEFJ-E2			
		< COIL >			
L951	1-424-918-21	COIL, CHOKE (SMD) 10uH			
L952	1-424-918-21	COIL, CHOKE (SMD) 10uH			
L953	1-424-918-21	COIL, CHOKE (SMD) 10uH			
L954	1-460-402-11	COMMON MODE CHOKE COIL			
L956	1-460-402-11	COMMON MODE CHOKE COIL			
		< TRANSISTOR >			
Q951	8-729-620-13	TRANSISTOR 2SC4154TP-1EF			
		< RESISTOR >			
R951	1-216-295-91	SHORT CHIP	0		
R952	1-216-864-11	SHORT CHIP	0		
R953	1-216-864-11	SHORT CHIP	0		
R954	1-216-864-11	SHORT CHIP	0		
R955	1-216-839-11	METAL CHIP	33K	5%	1/10W
R956	1-216-834-11	METAL CHIP	12K	5%	1/10W
R957	1-216-832-11	METAL CHIP	8.2K	5%	1/10W
R958	1-216-801-11	METAL CHIP	22	5%	1/10W
R959	1-216-801-11	METAL CHIP	22	5%	1/10W
R960	1-216-801-11	METAL CHIP	22	5%	1/10W
R961	1-216-801-11	METAL CHIP	22	5%	1/10W
R962	1-216-801-11	METAL CHIP	22	5%	1/10W
R963	1-216-801-11	METAL CHIP	22	5%	1/10W
R964	1-218-883-11	METAL CHIP	33K	0.5%	1/10W
R965	1-218-883-11	METAL CHIP	33K	0.5%	1/10W
R966	1-218-883-11	METAL CHIP	33K	0.5%	1/10W
R967	1-218-861-11	METAL CHIP	3.9K	0.5%	1/10W
R968	1-218-827-11	METAL CHIP	150	0.5%	1/10W
R969	1-218-867-11	METAL CHIP	6.8K	0.5%	1/10W
R970	1-211-989-11	METAL CHIP	68	0.5%	1/10W
R971	1-218-869-11	METAL CHIP	8.2K	0.5%	1/10W
R972	1-216-864-11	SHORT CHIP	0		
R973	1-216-864-11	SHORT CHIP	0		
R974	1-216-864-11	SHORT CHIP	0		
R975	1-216-821-11	METAL CHIP	1K	5%	1/10W
R976	1-216-829-11	METAL CHIP	4.7K	5%	1/10W
R977	1-216-864-11	SHORT CHIP	0		
R978	1-216-821-11	METAL CHIP	1K	5%	1/10W
R979	1-216-821-11	METAL CHIP	1K	5%	1/10W
R980	1-216-821-11	METAL CHIP	1K	5%	1/10W
R981	1-216-821-11	METAL CHIP	1K	5%	1/10W
R982	1-216-821-11	METAL CHIP	1K	5%	1/10W
R983	1-216-841-11	METAL CHIP	47K	5%	1/10W
R988	1-216-864-11	SHORT CHIP	0		
R989	1-216-864-11	SHORT CHIP	0		
R992	1-216-833-11	METAL CHIP	10K	5%	1/10W
R993	1-218-867-11	METAL CHIP	6.8K	0.5%	1/10W

****

FL-NET BOARD
****

Ref. No.	Part No.	Description			Remark
	4-154-640-01	SHEET (FL HOLDER), ADHESIVE			
		< CAPACITOR >			
C4101	1-124-234-00	ELECT	22uF	20%	16V
C4103	1-136-153-00	FILM	0.01uF	5%	50V
C4104	1-162-974-11	CERAMIC CHIP	0.01uF		50V
C4105	1-128-131-11	ELECT	22uF	20%	50V
C4106	1-164-360-11	CERAMIC CHIP	0.1uF		16V
C4107	1-162-974-11	CERAMIC CHIP	0.01uF		50V
C4108	1-162-974-11	CERAMIC CHIP	0.01uF		50V
C4110	1-107-826-11	CERAMIC CHIP	0.1uF	10%	16V
C4111	1-162-964-11	CERAMIC CHIP	0.001uF	10%	50V
C4112	1-162-927-11	CERAMIC CHIP	100PF	5%	50V
C4113	1-162-927-11	CERAMIC CHIP	100PF	5%	50V
C4114	1-162-927-11	CERAMIC CHIP	100PF	5%	50V
C4115	1-124-234-00	ELECT	22uF	20%	16V
C4119	1-162-970-11	CERAMIC CHIP	0.01uF	10%	25V
C4120	1-125-972-91	ELECT	100uF	20%	16V
C4121	1-127-573-11	CERAMIC CHIP	1uF	10%	16V
C4123	1-112-815-91	CERAMIC CHIP	10uF	20%	6.3V
C4125	1-165-621-91	CERAMIC CHIP	0.1uF		50V
C4126	1-107-826-11	CERAMIC CHIP	0.1uF	10%	16V
C4127	1-162-927-11	CERAMIC CHIP	100PF	5%	50V
C4128	1-128-131-11	ELECT	22uF	20%	50V
		< CONNECTOR >			
CN4102	1-779-275-11	CONNECTOR, FFC (LIF (NON-ZIF)) 7P			
CN4108	1-779-287-11	CONNECTOR, FFC (LIF (NON-ZIF)) 19P			
		< DIODE >			
D4101	6-500-334-01	DIODE MC2836-T112-1			
D4102	6-500-335-01	DIODE MC2838-T112-1			
D4103	6-502-970-01	DIODE DZ2J068M0L			
D4107	8-719-056-11	LED SML72423C-TP15 (STANDBY)			
		< COIL >			
L4101	1-412-537-31	INDUCTOR 100uH			
		< FLUORESCENT INDICATOR TUBE >			
ND4102	1-811-488-11	INDICATOR TUBE, FLUORESCENT			
		< TRANSISTOR >			
Q4101	6-550-065-01	TRANSISTOR CPH5504-TL-E			
Q4102	8-729-620-07	TRANSISTOR 2SC3052EF-T1-LEF			
Q4103	8-729-038-30	TRANSISTOR RT1P141M-TP-1			
Q4104	8-729-038-30	TRANSISTOR RT1P141M-TP-1			
		< RESISTOR >			
R4101	1-216-295-91	SHORT CHIP	0		

Ref. No.	Part No.	Description			Remark
R4102	1-218-446-11	METAL CHIP	1	5%	1/10W
R4103	1-216-826-11	METAL CHIP	2.7K	5%	1/10W
R4104	1-216-833-11	METAL CHIP	10K	5%	1/10W
R4105	1-216-809-11	METAL CHIP	100	5%	1/10W
R4106	1-216-809-11	METAL CHIP	100	5%	1/10W
R4107	1-216-846-11	METAL CHIP	120K	5%	1/10W
R4108	1-216-821-11	METAL CHIP	1K	5%	1/10W
R4109	1-216-864-11	SHORT CHIP	0		
R4110	1-216-864-11	SHORT CHIP	0		
R4111	1-216-864-11	SHORT CHIP	0		
R4112	1-216-833-11	METAL CHIP	10K	5%	1/10W
R4113	1-216-840-11	METAL CHIP	39K	5%	1/10W
R4114	1-216-821-11	METAL CHIP	1K	5%	1/10W
R4115	1-216-825-11	METAL CHIP	2.2K	5%	1/10W
R4116	1-216-821-11	METAL CHIP	1K	5%	1/10W
R4117	1-216-825-11	METAL CHIP	2.2K	5%	1/10W
R4120	1-216-810-11	METAL CHIP	120	5%	1/10W
R4121	1-216-864-11	SHORT CHIP	0		
R4122	1-216-864-11	SHORT CHIP	0		
R4123	1-216-864-11	SHORT CHIP	0		
R4124	1-216-864-11	SHORT CHIP	0		
R4125	1-216-864-11	SHORT CHIP	0		
R4126	1-216-864-11	SHORT CHIP	0		
R4127	1-216-825-11	METAL CHIP	2.2K	5%	1/10W
R4128	1-216-825-11	METAL CHIP	2.2K	5%	1/10W
R4129	1-216-829-11	METAL CHIP	4.7K	5%	1/10W
R4130	1-216-829-11	METAL CHIP	4.7K	5%	1/10W
R4131	1-216-833-11	METAL CHIP	10K	5%	1/10W
R4133	1-216-807-11	METAL CHIP	68	5%	1/10W
R4135	1-216-797-11	METAL CHIP	10	5%	1/10W
R4136	1-216-797-11	METAL CHIP	10	5%	1/10W
R4137	1-216-845-11	METAL CHIP	100K	5%	1/10W
R4138	1-216-864-11	SHORT CHIP	0		
		< SWITCH >			
S4101	1-762-875-21	SWITCH, KEYBOARD (I/⏻)			
S4102	1-762-875-21	SWITCH, KEYBOARD (⏏)			
S4103	1-762-875-21	SWITCH, KEYBOARD (■)			
S4104	1-762-875-21	SWITCH, KEYBOARD (▶II)			
S4105	1-762-875-21	SWITCH, KEYBOARD (▶▶ ⊳⊳I, TUNE +)			
S4106	1-762-875-21	SWITCH, KEYBOARD (I⊲⊲ ◀◀, TUNE –)			
S4107	1-762-875-21	SWITCH, KEYBOARD (⬆)			
S4108	1-762-875-21	SWITCH, KEYBOARD (ENTER)			
S4109	1-762-875-21	SWITCH, KEYBOARD (⬇)			
S4110	1-762-875-21	SWITCH, KEYBOARD (BACK)			
S4111	1-762-875-21	SWITCH, KEYBOARD (OPTIONS)			
		< TRANSFORMER >			
T4101	1-697-130-11	TRANSFORMER, DC-DC CONVERTER			

****

A-1820-897-A HP BOARD, COMPLETE
****

< CAPACITOR >

C1501	1-107-826-11	CERAMIC CHIP	0.1uF	10%	16V
C2502	1-107-826-11	CERAMIC CHIP	0.1uF	10%	16V
C4203	1-107-826-11	CERAMIC CHIP	0.1uF	10%	16V
		< DIODE >			
D4201	6-500-848-01	DIODE MC2840-T112-1			
		< FERRITE BEAD >			
FB1501	1-481-348-21	EMI FERRITE (SMD) (1608)			
FB2501	1-481-348-21	EMI FERRITE (SMD) (1608)			
FB4201	1-481-348-21	EMI FERRITE (SMD) (1608)			
		< JACK >			
J4201	1-842-698-11	JACK (PHONES)			
		< JUMPER RESISTOR >			
R4202	1-216-864-11	SHORT CHIP	0		

****

JOG1 BOARD
****

< CAPACITOR >

C4301	1-165-908-11	CERAMIC CHIP	1uF	10%	10V
C4302	1-107-826-11	CERAMIC CHIP	0.1uF	10%	16V
		< CONNECTOR >			
CN4301	1-779-275-11	CONNECTOR, FFC (LIF (NON-ZIF)) 7P			
		< IC >			
IC4301	6-600-768-01	IC PNA4823M03S0			
		< RESISTOR >			
R4305	1-216-825-11	METAL CHIP	2.2K	5%	1/10W
R4306	1-216-821-11	METAL CHIP	1K	5%	1/10W
R4307	1-216-825-11	METAL CHIP	2.2K	5%	1/10W
R4308	1-216-821-11	METAL CHIP	1K	5%	1/10W
R4309	1-216-805-11	METAL CHIP	47	5%	1/10W
R4310	1-216-837-11	METAL CHIP	22K	5%	1/10W
R4311	1-216-809-11	METAL CHIP	100	5%	1/10W
R4312	1-216-833-11	METAL CHIP	10K	5%	1/10W
R4313	1-216-833-11	METAL CHIP	10K	5%	1/10W
R4316	1-216-829-11	METAL CHIP	4.7K	5%	1/10W
R4317	1-216-829-11	METAL CHIP	4.7K	5%	1/10W
		< ROTARY ENCODER >			
S4301	1-418-725-51	ENCODER, ROTARY (12 TYPE) (VOLUME)			
S4302	1-489-832-11	ENCODER, ROTARY (FUNCTION)			

****

JOG2 BOARD
****

< RESISTOR >

R4321	1-216-825-11	METAL CHIP	2.2K	5%	1/10W
R4322	1-216-821-11	METAL CHIP	1K	5%	1/10W
R4323	1-216-825-11	METAL CHIP	2.2K	5%	1/10W
R4324	1-216-821-11	METAL CHIP	1K	5%	1/10W
R4325	1-216-833-11	METAL CHIP	10K	5%	1/10W
R4326	1-216-833-11	METAL CHIP	10K	5%	1/10W
R4327	1-216-829-11	METAL CHIP	4.7K	5%	1/10W
R4328	1-216-829-11	METAL CHIP	4.7K	5%	1/10W

Note: When replacing the rotary encoder (Ref. No. S4301 (JOG1 board), S4321 and S4322 (JOG2 board)), replace the three parts at the same time.

Ref. No.	Part No.	Description			Remark
		< ROTARY ENCODE >			
S4321	1-418-725-51	ENCODER, ROTARY (12 TYPE) (TONE TREBLE)			
S4322	1-418-725-51	ENCODER, ROTARY (12 TYPE) (TONE BASS)			
**********					
		LAN BOARD			
		**********			
		< CAPACITOR >			
C1036	1-114-472-91	CERAMIC CHIP	0.001uF	10%	2KV
C1037	1-162-964-11	CERAMIC CHIP	0.001uF	10%	50V
		< MODULAR JACK >			
CN1006	1-842-235-11	JACK, MODULAR (NETWORK 🖧)			
		< JUMPER RESISTOR >			
JR1031	1-216-864-11	SHORT CHIP	0		
R1064	1-216-864-11	SHORT CHIP	0		
R1065	1-216-864-11	SHORT CHIP	0		
**********					
	A-1823-064-A	MAIN BOARD, COMPLETE (G2NiP)			
	A-1823-068-A	MAIN BOARD, COMPLETE (G2BNiP: AEP, UK)			
	A-1847-083-A	MAIN BOARD, COMPLETE (G2BNiP: AUS)			
		**********			
		< CAPACITOR >			
C401	1-125-777-11	CERAMIC CHIP	0.1uF	10%	10V
C402	1-125-777-11	CERAMIC CHIP	0.1uF	10%	10V
C403	1-125-777-11	CERAMIC CHIP	0.1uF	10%	10V
C405	1-164-858-11	CERAMIC CHIP	22PF	5%	50V
C406	1-164-856-81	CERAMIC CHIP	18PF	5%	50V
C407	1-125-777-11	CERAMIC CHIP	0.1uF	10%	10V
C408	1-107-826-11	CERAMIC CHIP	0.1uF	10%	16V
C409	1-125-777-11	CERAMIC CHIP	0.1uF	10%	10V
C410	1-125-777-11	CERAMIC CHIP	0.1uF	10%	10V
C411	1-125-777-11	CERAMIC CHIP	0.1uF	10%	10V
C412	1-100-567-81	CERAMIC CHIP	0.01uF	10%	25V
C413	1-125-777-11	CERAMIC CHIP	0.1uF	10%	10V
C414	1-164-850-11	CERAMIC CHIP	10PF	0.5PF	50V
C415	1-164-850-11	CERAMIC CHIP	10PF	0.5PF	50V
C416	1-100-567-81	CERAMIC CHIP	0.01uF	10%	25V
C417	1-112-717-91	CERAMIC CHIP	1uF	10%	6.3V
C419	1-112-717-91	CERAMIC CHIP	1uF	10%	6.3V (G2BNiP)
C420	1-100-582-21	ELECT CHIP	470uF	20%	4V
C602	1-114-582-91	CERAMIC CHIP	0.1uF	10%	16V
C603	1-107-826-11	CERAMIC CHIP	0.1uF	10%	16V
C604	1-125-777-11	CERAMIC CHIP	0.1uF	10%	10V
C605	1-125-777-11	CERAMIC CHIP	0.1uF	10%	10V
C606	1-125-777-11	CERAMIC CHIP	0.1uF	10%	10V
C607	1-125-777-11	CERAMIC CHIP	0.1uF	10%	10V
C608	1-112-717-91	CERAMIC CHIP	1uF	10%	6.3V
C609	1-117-681-11	ELECT CHIP	100uF	20%	16V
C610	1-137-710-91	CERAMIC CHIP	10uF	20%	6.3V
C612	1-164-850-11	CERAMIC CHIP	10PF	0.5PF	50V
C613	1-164-850-11	CERAMIC CHIP	10PF	0.5PF	50V
C614	1-125-777-11	CERAMIC CHIP	0.1uF	10%	10V
C615	1-125-777-11	CERAMIC CHIP	0.1uF	10%	10V
C617	1-125-777-11	CERAMIC CHIP	0.1uF	10%	10V
C622	1-125-777-11	CERAMIC CHIP	0.1uF	10%	10V
C623	1-125-777-11	CERAMIC CHIP	0.1uF	10%	10V
C626	1-125-777-11	CERAMIC CHIP	0.1uF	10%	10V
C627	1-125-777-11	CERAMIC CHIP	0.1uF	10%	10V
C726	1-112-298-91	CERAMIC CHIP	1uF	10%	16V
C727	1-127-931-21	ELECT CHIP	470uF	20%	16V
C728	1-112-815-91	CERAMIC CHIP	10uF	20%	6.3V
C729	1-112-298-91	CERAMIC CHIP	1uF	10%	16V
C730	1-116-108-11	ELECT CHIP	330uF	20%	10V
C731	1-112-815-91	CERAMIC CHIP	10uF	20%	6.3V
C732	1-100-660-91	CERAMIC CHIP	1uF	10%	10V
C733	1-100-660-91	CERAMIC CHIP	1uF	10%	10V
C734	1-124-779-00	ELECT CHIP	10uF	20%	16V
C736	1-126-926-11	ELECT	1000uF	20%	10V
C737	1-164-882-11	CERAMIC CHIP	220PF	5%	16V (G2BNiP: AEP, UK/G2NiP)
C738	1-164-882-11	CERAMIC CHIP	220PF	5%	16V (G2BNiP: AEP, UK/G2NiP)
C801	1-125-777-11	CERAMIC CHIP	0.1uF	10%	10V (G2BNiP)
C802	1-124-779-00	ELECT CHIP	10uF	20%	16V (G2BNiP)
C806	1-124-779-00	ELECT CHIP	10uF	20%	16V
C807	1-124-779-00	ELECT CHIP	10uF	20%	16V
C808	1-124-779-00	ELECT CHIP	10uF	20%	16V
C809	1-124-779-00	ELECT CHIP	10uF	20%	16V
C810	1-165-989-11	CERAMIC CHIP	10uF	10%	6.3V
C811	1-124-779-00	ELECT CHIP	10uF	20%	16V
C812	1-124-779-00	ELECT CHIP	10uF	20%	16V
C813	1-125-777-11	CERAMIC CHIP	0.1uF	10%	10V
C814	1-165-989-11	CERAMIC CHIP	10uF	10%	6.3V
C815	1-125-777-11	CERAMIC CHIP	0.1uF	10%	10V
C816	1-119-923-11	CERAMIC CHIP	0.047uF	10%	10V
C817	1-124-779-00	ELECT CHIP	10uF	20%	16V
C818	1-125-777-11	CERAMIC CHIP	0.1uF	10%	10V
C819	1-125-777-11	CERAMIC CHIP	0.1uF	10%	10V
C821	1-119-923-11	CERAMIC CHIP	0.047uF	10%	10V
C822	1-119-923-11	CERAMIC CHIP	0.047uF	10%	10V
C823	1-107-820-81	CERAMIC CHIP	0.1uF		16V
C825	1-124-779-00	ELECT CHIP	10uF	20%	16V
C829	1-165-989-11	CERAMIC CHIP	10uF	10%	6.3V
C830	1-107-820-81	CERAMIC CHIP	0.1uF		16V
C831	1-114-385-11	ELECT CHIP	470uF	20%	6.3V
C832	1-114-385-11	ELECT CHIP	470uF	20%	6.3V
C834	1-107-820-81	CERAMIC CHIP	0.1uF		16V
C835	1-119-923-11	CERAMIC CHIP	0.047uF	10%	10V
C836	1-100-053-21	ELECT CHIP	220uF	20%	6.3V
C838	1-125-777-11	CERAMIC CHIP	0.1uF	10%	10V
C839	1-128-994-21	ELECT CHIP	47uF	20%	10V
C840	1-114-385-11	ELECT CHIP	470uF	20%	6.3V
C841	1-114-385-11	ELECT CHIP	470uF	20%	6.3V
C849	1-125-777-11	CERAMIC CHIP	0.1uF	10%	10V
C851	1-119-923-11	CERAMIC CHIP	0.047uF	10%	10V
C855	1-124-779-00	ELECT CHIP	10uF	20%	16V
C856	1-125-777-11	CERAMIC CHIP	0.1uF	10%	10V
C857	1-127-772-81	CERAMIC CHIP	0.033uF	10%	10V
C858	1-125-777-11	CERAMIC CHIP	0.1uF	10%	10V
C859	1-164-850-11	CERAMIC CHIP	10PF	0.5PF	50V
C860	1-164-934-11	CERAMIC CHIP	330PF	10%	50V
C861	1-125-777-11	CERAMIC CHIP	0.1uF	10%	10V
C862	1-125-777-11	CERAMIC CHIP	0.1uF	10%	10V
C865	1-164-850-11	CERAMIC CHIP	10PF	0.5PF	50V

Note: When replacing the rotary encoder (Ref. No. S4301 (JOG1 board), S4321 and S4322 (JOG2 board)), replace the three parts at the same time.

Ref. No.	Part No.	Description			Remark
C870	1-164-870-11	CERAMIC CHIP	68PF	5%	50V
C872	1-164-870-11	CERAMIC CHIP	68PF	5%	50V
C873	1-125-777-11	CERAMIC CHIP	0.1uF	10%	10V
C875	1-164-870-11	CERAMIC CHIP	68PF	5%	50V
C878	1-165-989-11	CERAMIC CHIP	10uF	10%	6.3V
C879	1-112-717-91	CERAMIC CHIP	1uF	10%	6.3V
C880	1-125-777-11	CERAMIC CHIP	0.1uF	10%	10V
C881	1-112-717-91	CERAMIC CHIP	1uF	10%	6.3V
C883	1-112-717-91	CERAMIC CHIP	1uF	10%	6.3V
C884	1-164-941-11	CERAMIC CHIP	0.0047uF	10%	16V
C896	1-124-779-00	ELECT CHIP	10uF	20%	16V
C897	1-100-660-91	CERAMIC CHIP	1uF	10%	10V
C898	1-107-820-81	CERAMIC CHIP	0.1uF		16V
C899	1-117-681-11	ELECT CHIP	100uF	20%	16V
C900	1-164-943-81	CERAMIC CHIP	0.01uF	10%	16V
C909	1-114-582-91	CERAMIC CHIP	0.1uF	10%	16V
C910	1-107-820-81	CERAMIC CHIP	0.1uF		16V
C911	1-117-681-11	ELECT CHIP	100uF	20%	16V
C1403	1-165-979-21	ELECT CHIP	100uF	20%	6.3V
C1405	1-164-854-11	CERAMIC CHIP	15PF	5%	50V
C1406	1-164-870-11	CERAMIC CHIP	68PF	5%	50V
C1408	1-164-854-11	CERAMIC CHIP	15PF	5%	50V
C1409	1-164-870-11	CERAMIC CHIP	68PF	5%	50V
C1410	1-164-940-11	CERAMIC CHIP	0.0033uF	10%	16V
C1411	1-112-672-81	CERAMIC CHIP	330PF	5%	50V
C1412	1-112-692-11	CERAMIC CHIP	1000PF	5%	50V
C1413	1-164-854-11	CERAMIC CHIP	15PF	5%	50V
C1414	1-164-870-11	CERAMIC CHIP	68PF	5%	50V
C1416	1-164-854-11	CERAMIC CHIP	15PF	5%	50V
C1417	1-164-870-11	CERAMIC CHIP	68PF	5%	50V
C1419	1-164-933-11	CERAMIC CHIP	220PF	10%	50V
C1420	1-164-854-11	CERAMIC CHIP	15PF	5%	50V
C1421	1-164-870-11	CERAMIC CHIP	68PF	5%	50V
C1422	1-164-882-11	CERAMIC CHIP	220PF	5%	16V
C1423	1-164-854-11	CERAMIC CHIP	15PF	5%	50V
C1424	1-164-870-11	CERAMIC CHIP	68PF	5%	50V
C1425	1-164-882-11	CERAMIC CHIP	220PF	5%	16V
C1426	1-164-854-11	CERAMIC CHIP	15PF	5%	50V
C1427	1-164-870-11	CERAMIC CHIP	68PF	5%	50V
C1431	1-164-870-11	CERAMIC CHIP	68PF	5%	50V
C1432	1-164-854-11	CERAMIC CHIP	15PF	5%	50V
C1433	1-126-233-11	ELECT	22uF	20%	25V
C2403	1-165-979-21	ELECT CHIP	100uF	20%	6.3V
C2405	1-164-854-11	CERAMIC CHIP	15PF	5%	50V
C2406	1-164-870-11	CERAMIC CHIP	68PF	5%	50V
C2408	1-164-854-11	CERAMIC CHIP	15PF	5%	50V
C2409	1-164-870-11	CERAMIC CHIP	68PF	5%	50V
C2410	1-164-940-11	CERAMIC CHIP	0.0033uF	10%	16V
C2411	1-112-672-81	CERAMIC CHIP	330PF	5%	50V
C2412	1-112-692-11	CERAMIC CHIP	1000PF	5%	50V
C2413	1-164-854-11	CERAMIC CHIP	15PF	5%	50V
C2414	1-164-870-11	CERAMIC CHIP	68PF	5%	50V
C2416	1-164-854-11	CERAMIC CHIP	15PF	5%	50V
C2417	1-164-870-11	CERAMIC CHIP	68PF	5%	50V
C2419	1-164-933-11	CERAMIC CHIP	220PF	10%	50V
C2420	1-164-870-11	CERAMIC CHIP	68PF	5%	50V
C2421	1-164-854-11	CERAMIC CHIP	15PF	5%	50V
C2422	1-164-882-11	CERAMIC CHIP	220PF	5%	16V
C2423	1-164-854-11	CERAMIC CHIP	15PF	5%	50V
C2424	1-164-870-11	CERAMIC CHIP	68PF	5%	50V

Ref. No.	Part No.	Description			Remark
C2425	1-164-882-11	CERAMIC CHIP	220PF	5%	16V
C2426	1-164-854-11	CERAMIC CHIP	15PF	5%	50V
C2427	1-164-870-11	CERAMIC CHIP	68PF	5%	50V
C2428	1-127-772-81	CERAMIC CHIP	0.033uF	10%	10V
C2429	1-164-934-11	CERAMIC CHIP	330PF	10%	50V
C2430	1-127-931-21	ELECT CHIP	470uF	20%	16V
C2431	1-164-870-11	CERAMIC CHIP	68PF	5%	50V
C2432	1-164-854-11	CERAMIC CHIP	15PF	5%	50V
C2433	1-126-233-11	ELECT	22uF	20%	25V
C2434	1-107-820-81	CERAMIC CHIP	0.1uF		16V
C2435	1-107-820-81	CERAMIC CHIP	0.1uF		16V
C2436	1-114-599-21	ELECT CHIP	10uF	20%	35V
		< CONNECTOR >			
CN401	1-778-692-51	CONNECTOR, FFC/FPC 21P			
CN402	1-778-692-51	CONNECTOR, FFC/FPC 21P			
CN403	1-784-374-51	CONNECTOR, FFC/FPC 15P			
CN404	1-778-691-51	CONNECTOR, FFC/FPC 19P			
CN406	1-784-368-51	CONNECTOR, FFC/FPC 9P			
CN407	1-784-368-51	CONNECTOR, FFC/FPC 9P			
CN408	1-784-367-51	CONNECTOR, FFC/FPC 8P (G2BNiP)			
CN601	1-764-250-21	PIN, CONNECTOR (PC BOARD) 4P			
CN701	1-764-250-21	PIN, CONNECTOR (PC BOARD) 4P			
CN702	1-816-296-21	PIN, CONNECTOR (PC BOARD) 9P			
CN803	1-794-032-21	PIN, CONNECTOR (PC BOARD) 11P			
CN805	1-779-993-11	PIN, CONNECTOR (PWB) 5P			
		< DIODE >			
D401	6-502-961-01	DIODE DA2J10100L			
D601	6-500-848-01	DIODE MC2840-T112-1			
D708	6-502-961-01	DIODE DA2J10100L			
D709	8-719-053-18	DIODE 1SR154-400TE-25			
D710	8-719-053-18	DIODE 1SR154-400TE-25			
D801	6-502-961-01	DIODE DA2J10100L			
D802	6-502-961-01	DIODE DA2J10100L			
		< EARTH TERMINAL >			
ET601	1-780-482-11	EARTH TERMINAL			
ET802	1-780-482-11	EARTH TERMINAL			
ET803	1-780-482-11	EARTH TERMINAL			
		< FERRITE BEAD >			
FB604	1-481-348-21	EMI FERRITE (SMD) (1608)			
FB813	1-469-324-21	FERRITE, EMI (SMD) (2012)			
FB814	1-469-324-21	FERRITE, EMI (SMD) (2012)			
FB815	1-469-324-21	FERRITE, EMI (SMD) (2012)			
FB816	1-469-324-21	FERRITE, EMI (SMD) (2012)			
FB872	1-481-348-21	EMI FERRITE (SMD) (1608)			
FB873	1-400-833-21	SMD EMI FERRITE			
FB874	1-400-833-21	SMD EMI FERRITE			
		< IC >			
IC402	A-1855-526-A	IC R5F3650NBDFA (for SERVICE) (G2NiP)			
IC402	A-1857-584-A	IC R5F3650NBDFA (for SERVICE) (G2BNiP)			
IC403	6-713-333-01	IC PST8429UL			
IC404	6-713-362-01	IC MFI341S2164			
IC601	6-717-986-01	IC BU94604BKV-E2			
IC602	6-715-164-01	IC TPS2553DBVR			
IC704	6-716-462-01	IC BD00GA3WEFJ-E2			
IC705	6-716-739-01	IC BD00GC0WEFJ-SE2			

MAIN

Ref. No.	Part No.	Description			Remark
IC706	6-708-913-01	IC TK73400AU3G0L-C			
IC801	8-759-564-10	IC 74LVC157A-PW (G2BNiP)			
IC802	6-712-740-01	IC PCM1681PWPR			
IC803	8-759-430-37	IC MC14052BDTR2			
IC804	6-710-554-01	IC PCM1808PWR			
IC805	6-715-490-01	IC BU9408KS2			
IC807	6-705-337-01	IC TK11150CSCL-G			
IC808	8-759-422-21	IC NJM4580V (TE2)			
IC2222	8-759-422-21	IC NJM4580V (TE2)			
		< TRANSISTOR >			
Q401	8-729-620-13	TRANSISTOR	2SC4154TP-1EF		
Q702	6-551-699-01	TRANSISTOR	ISA1602AM1-T111-1EF		
Q703	8-729-038-30	TRANSISTOR	RT1P141M-TP-1		
Q704	8-729-038-37	TRANSISTOR	RT1N141M-TP-1		
Q801	8-729-027-46	TRANSISTOR	DTC114YKA-T146		
Q802	8-729-027-46	TRANSISTOR	DTC114YKA-T146		
Q807	8-729-027-46	TRANSISTOR	DTC114YKA-T146		
Q808	8-729-027-23	TRANSISTOR	DTA114EKA-T146		
Q809	8-729-027-46	TRANSISTOR	DTC114YKA-T146		
Q811	8-729-043-90	TRANSISTOR	IMX9T110		
Q812	8-729-620-13	TRANSISTOR	2SC4154TP-1EF		
Q813	8-729-043-90	TRANSISTOR	IMX9T110		
Q814	8-729-027-46	TRANSISTOR	DTC114YKA-T146		
		< RESISTOR >			
R401	1-218-941-81	METAL CHIP	100	5%	1/16W
R402	1-218-941-81	METAL CHIP	100	5%	1/16W
R403	1-218-941-81	METAL CHIP	100	5%	1/16W
R404	1-218-941-81	METAL CHIP	100	5%	1/16W
R405	1-218-941-81	METAL CHIP	100	5%	1/16W
R406	1-218-941-81	METAL CHIP	100	5%	1/16W
R407	1-218-941-81	METAL CHIP	100	5%	1/16W
R408	1-218-941-81	METAL CHIP	100	5%	1/16W
R409	1-218-941-81	METAL CHIP	100	5%	1/16W
R410	1-245-604-11	METAL CHIP	10M	5%	1/16W
R411	1-218-981-91	METAL CHIP	220K	5%	1/16W
R412	1-218-941-81	METAL CHIP	100	5%	1/16W
R413	1-218-990-81	SHORT CHIP	0		
R414	1-218-979-11	METAL CHIP	150K	5%	1/16W
R415	1-216-857-11	METAL CHIP	1M	5%	1/10W
R418	1-218-941-81	METAL CHIP	100	5%	1/16W
R419	1-218-941-81	METAL CHIP	100	5%	1/16W
R420	1-218-941-81	METAL CHIP	100	5%	1/16W
R421	1-218-990-81	SHORT CHIP	0		
R422	1-218-941-81	METAL CHIP	100	5%	1/16W
R423	1-218-941-81	METAL CHIP	100	5%	1/16W
R424	1-218-941-81	METAL CHIP	100	5%	1/16W
R425	1-218-941-81	METAL CHIP	100	5%	1/16W
R426	1-218-941-81	METAL CHIP	100	5%	1/16W
R427	1-218-941-81	METAL CHIP	100	5%	1/16W
R428	1-218-941-81	METAL CHIP	100	5%	1/16W
R429	1-218-941-81	METAL CHIP	100	5%	1/16W
R430	1-218-941-81	METAL CHIP	100	5%	1/16W
R431	1-218-941-81	METAL CHIP	100	5%	1/16W
R432	1-218-941-81	METAL CHIP	100	5%	1/16W
R433	1-218-941-81	METAL CHIP	100	5%	1/16W
R434	1-218-941-81	METAL CHIP	100	5%	1/16W
R435	1-218-941-81	METAL CHIP	100	5%	1/16W (G2BNiP)

Ref. No.	Part No.	Description			Remark
R436	1-218-941-81	METAL CHIP	100	5%	1/16W
R437	1-218-941-81	METAL CHIP	100	5%	1/16W
R438	1-218-941-81	METAL CHIP	100	5%	1/16W
R439	1-218-941-81	METAL CHIP	100	5%	1/16W
R443	1-218-941-81	METAL CHIP	100	5%	1/16W
R444	1-218-941-81	METAL CHIP	100	5%	1/16W
R445	1-218-941-81	METAL CHIP	100	5%	1/16W
R447	1-218-941-81	METAL CHIP	100	5%	1/16W
R448	1-218-941-81	METAL CHIP	100	5%	1/16W
R449	1-218-941-81	METAL CHIP	100	5%	1/16W (G2BNiP)
R450	1-218-941-81	METAL CHIP	100	5%	1/16W (G2BNiP)
R451	1-218-990-81	SHORT CHIP	0		
R452	1-218-941-81	METAL CHIP	100	5%	1/16W
R453	1-218-941-81	METAL CHIP	100	5%	1/16W
R454	1-218-941-81	METAL CHIP	100	5%	1/16W
R455	1-218-941-81	METAL CHIP	100	5%	1/16W
R456	1-218-941-81	METAL CHIP	100	5%	1/16W
R457	1-218-941-81	METAL CHIP	100	5%	1/16W
R458	1-218-941-81	METAL CHIP	100	5%	1/16W
R459	1-218-941-81	METAL CHIP	100	5%	1/16W
R460	1-218-941-81	METAL CHIP	100	5%	1/16W
R461	1-218-941-81	METAL CHIP	100	5%	1/16W
R462	1-218-941-81	METAL CHIP	100	5%	1/16W
R463	1-218-941-81	METAL CHIP	100	5%	1/16W
R466	1-218-941-81	METAL CHIP	100	5%	1/16W
R467	1-218-941-81	METAL CHIP	100	5%	1/16W
R468	1-218-941-81	METAL CHIP	100	5%	1/16W
R469	1-218-941-81	METAL CHIP	100	5%	1/16W
R470	1-218-941-81	METAL CHIP	100	5%	1/16W
R471	1-218-941-81	METAL CHIP	100	5%	1/16W
R472	1-218-941-81	METAL CHIP	100	5%	1/16W
R473	1-218-941-81	METAL CHIP	100	5%	1/16W
R474	1-218-941-81	METAL CHIP	100	5%	1/16W
R475	1-218-941-81	METAL CHIP	100	5%	1/16W
R476	1-218-941-81	METAL CHIP	100	5%	1/16W
R477	1-218-941-81	METAL CHIP	100	5%	1/16W
R478	1-218-941-81	METAL CHIP	100	5%	1/16W
R479	1-218-941-81	METAL CHIP	100	5%	1/16W
R480	1-218-941-81	METAL CHIP	100	5%	1/16W
R481	1-218-941-81	METAL CHIP	100	5%	1/16W
R482	1-218-990-81	SHORT CHIP	0		
R483	1-218-941-81	METAL CHIP	100	5%	1/16W
R484	1-218-941-81	METAL CHIP	100	5%	1/16W
R485	1-218-941-81	METAL CHIP	100	5%	1/16W
R486	1-218-941-81	METAL CHIP	100	5%	1/16W
R487	1-218-941-81	METAL CHIP	100	5%	1/16W
R488	1-218-941-81	METAL CHIP	100	5%	1/16W
R489	1-218-941-81	METAL CHIP	100	5%	1/16W
R490	1-218-941-81	METAL CHIP	100	5%	1/16W
R491	1-218-941-81	METAL CHIP	100	5%	1/16W
R492	1-218-990-81	SHORT CHIP	0		
R493	1-218-941-81	METAL CHIP	100	5%	1/16W
R494	1-218-941-81	METAL CHIP	100	5%	1/16W
R495	1-218-941-81	METAL CHIP	100	5%	1/16W
R496	1-218-990-81	SHORT CHIP	0		
R497	1-218-941-81	METAL CHIP	100	5%	1/16W
R498	1-218-990-81	SHORT CHIP	0		
R499	1-218-990-81	SHORT CHIP	0		

Ref. No.	Part No.	Description			Remark
R500	1-218-990-81	SHORT CHIP	0		
R501	1-218-990-81	SHORT CHIP	0 (G2BNiP)		
R502	1-218-990-81	SHORT CHIP	0 (G2BNiP)		
R503	1-218-990-81	SHORT CHIP	0		
R505	1-218-990-81	SHORT CHIP	0 (G2BNiP)		
R506	1-218-990-81	SHORT CHIP	0		
R507	1-218-990-81	SHORT CHIP	0		
R508	1-218-990-81	SHORT CHIP	0		
R510	1-218-990-81	SHORT CHIP	0		
R511	1-218-990-81	SHORT CHIP	0		
R512	1-218-990-81	SHORT CHIP	0		
R513	1-218-990-81	SHORT CHIP	0		
R514	1-218-990-81	SHORT CHIP	0		
R515	1-218-990-81	SHORT CHIP	0		
R516	1-218-990-81	SHORT CHIP	0		
R517	1-218-965-11	METAL CHIP	10K	5%	1/16W
R518	1-218-965-11	METAL CHIP	10K	5%	1/16W
R519	1-218-990-81	SHORT CHIP	0		
R520	1-218-973-11	METAL CHIP	47K	5%	1/16W
R521	1-218-990-81	SHORT CHIP	0		
R522	1-218-961-11	METAL CHIP	4.7K	5%	1/16W
R523	1-218-990-81	SHORT CHIP	0		
R524	1-218-961-11	METAL CHIP	4.7K	5%	1/16W
R525	1-218-990-81	SHORT CHIP	0		
R526	1-218-990-81	SHORT CHIP	0 (G2BNiP)		
R527	1-218-973-11	METAL CHIP	47K	5%	1/16W
R528	1-218-973-11	METAL CHIP	47K	5%	1/16W
R529	1-218-961-11	METAL CHIP	4.7K	5%	1/16W
R530	1-218-961-11	METAL CHIP	4.7K	5%	1/16W
R531	1-218-990-81	SHORT CHIP	0		
R532	1-218-990-81	SHORT CHIP	0		
R533	1-218-965-11	METAL CHIP	10K	5%	1/16W
R534	1-218-990-81	SHORT CHIP	0		
R535	1-218-990-81	SHORT CHIP	0		
R536	1-218-981-91	METAL CHIP	220K	5%	1/16W
R537	1-218-965-11	METAL CHIP	10K	5%	1/16W
R538	1-218-990-81	SHORT CHIP	0		
R539	1-218-990-81	SHORT CHIP	0		
R540	1-218-990-81	SHORT CHIP	0		
R541	1-218-965-11	METAL CHIP	10K	5%	1/16W
R542	1-218-990-81	SHORT CHIP	0		
R543	1-218-990-81	SHORT CHIP	0		
R544	1-218-990-81	SHORT CHIP	0		
R545	1-218-990-81	SHORT CHIP	0		
R546	1-218-965-11	METAL CHIP	10K	5%	1/16W
R547	1-218-961-11	METAL CHIP	4.7K	5%	1/16W
R548	1-218-961-11	METAL CHIP	4.7K	5%	1/16W
R549	1-218-990-81	SHORT CHIP	0		
R550	1-218-990-81	SHORT CHIP	0		
R551	1-218-965-11	METAL CHIP	10K	5%	1/16W
R552	1-218-990-81	SHORT CHIP	0		
R553	1-218-990-81	SHORT CHIP	0		
R554	1-218-990-81	SHORT CHIP	0		
R555	1-218-965-11	METAL CHIP	10K	5%	1/16W
R556	1-218-990-81	SHORT CHIP	0		
R557	1-218-965-11	METAL CHIP	10K	5%	1/16W
R558	1-218-965-11	METAL CHIP	10K	5%	1/16W
R559	1-218-990-81	SHORT CHIP	0		
R560	1-218-990-81	SHORT CHIP	0		
R561	1-218-990-81	SHORT CHIP	0		
R562	1-218-990-81	SHORT CHIP	0		
R563	1-218-990-81	SHORT CHIP	0		
R564	1-218-961-11	METAL CHIP	4.7K	5%	1/16W (G2BNiP: AUS)
R565	1-218-961-11	METAL CHIP	4.7K	5%	1/16W (G2BNiP: AUS)
R565	1-218-990-81	SHORT CHIP	0 (G2BNiP: AEP, UK/G2NiP)		
R566	1-218-990-81	SHORT CHIP	0		
R567	1-218-973-11	METAL CHIP	47K	5%	1/16W
R568	1-218-973-11	METAL CHIP	47K	5%	1/16W
R569	1-218-965-11	METAL CHIP	10K	5%	1/16W
R570	1-218-973-11	METAL CHIP	47K	5%	1/16W
R571	1-216-864-11	SHORT CHIP	0		
R573	1-218-990-81	SHORT CHIP	0		
R574	1-218-965-11	METAL CHIP	10K	5%	1/16W
R575	1-218-965-11	METAL CHIP	10K	5%	1/16W
R576	1-218-990-81	SHORT CHIP	0		
R577	1-218-965-11	METAL CHIP	10K	5%	1/16W
R578	1-218-965-11	METAL CHIP	10K	5%	1/16W
R579	1-218-973-11	METAL CHIP	47K	5%	1/16W
R580	1-218-965-11	METAL CHIP	10K	5%	1/16W
R582	1-218-973-11	METAL CHIP	47K	5%	1/16W
R584	1-218-973-11	METAL CHIP	47K	5%	1/16W
R585	1-218-965-11	METAL CHIP	10K	5%	1/16W
R586	1-218-990-81	SHORT CHIP	0		
R587	1-218-990-81	SHORT CHIP	0		
R588	1-218-990-81	SHORT CHIP	0		
R589	1-218-990-81	SHORT CHIP	0		
R590	1-218-990-81	SHORT CHIP	0		
R591	1-218-990-81	SHORT CHIP	0		
R594	1-218-990-81	SHORT CHIP	0 (G2BNiP)		
R595	1-218-990-81	SHORT CHIP	0 (G2BNiP)		
R596	1-218-990-81	SHORT CHIP	0 (G2BNiP)		
R597	1-218-990-81	SHORT CHIP	0 (G2BNiP)		
R600	1-218-965-11	METAL CHIP	10K	5%	1/16W
R601	1-218-941-81	METAL CHIP	100	5%	1/16W
R603	1-216-864-11	SHORT CHIP	0		
R604	1-218-941-81	METAL CHIP	100	5%	1/16W
R605	1-218-965-11	METAL CHIP	10K	5%	1/16W
R606	1-218-941-81	METAL CHIP	100	5%	1/16W
R607	1-218-941-81	METAL CHIP	100	5%	1/16W
R608	1-218-941-81	METAL CHIP	100	5%	1/16W
R609	1-218-941-81	METAL CHIP	100	5%	1/16W
R610	1-218-990-81	SHORT CHIP	0		
R611	1-218-990-81	SHORT CHIP	0		
R612	1-218-965-11	METAL CHIP	10K	5%	1/16W
R613	1-218-965-11	METAL CHIP	10K	5%	1/16W
R614	1-218-965-11	METAL CHIP	10K	5%	1/16W
R615	1-218-965-11	METAL CHIP	10K	5%	1/16W
R616	1-218-965-11	METAL CHIP	10K	5%	1/16W
R617	1-218-965-11	METAL CHIP	10K	5%	1/16W
R618	1-218-965-11	METAL CHIP	10K	5%	1/16W
R619	1-218-965-11	METAL CHIP	10K	5%	1/16W
R620	1-218-965-11	METAL CHIP	10K	5%	1/16W
R621	1-218-965-11	METAL CHIP	10K	5%	1/16W
R622	1-216-864-11	SHORT CHIP	0		
R623	1-218-941-81	METAL CHIP	100	5%	1/16W
R624	1-216-864-11	SHORT CHIP	0		
R625	1-218-941-81	METAL CHIP	100	5%	1/16W
R626	1-216-864-11	SHORT CHIP	0		
R627	1-218-941-81	METAL CHIP	100	5%	1/16W

MAIN

Ref. No.	Part No.	Description			Remark
R628	1-218-965-11	METAL CHIP	10K	5%	1/16W
R629	1-218-965-11	METAL CHIP	10K	5%	1/16W
R630	1-218-965-11	METAL CHIP	10K	5%	1/16W
R632	1-218-965-11	METAL CHIP	10K	5%	1/16W
R633	1-218-965-11	METAL CHIP	10K	5%	1/16W
R634	1-218-965-11	METAL CHIP	10K	5%	1/16W
R635	1-218-965-11	METAL CHIP	10K	5%	1/16W
R636	1-218-989-11	METAL CHIP	1M	5%	1/16W
R637	1-208-709-11	METAL CHIP	12K	0.5%	1/16W
R638	1-218-935-11	METAL CHIP	33	5%	1/16W
R639	1-218-935-11	METAL CHIP	33	5%	1/16W
R640	1-218-947-11	METAL CHIP	330	5%	1/16W
R644	1-216-864-11	SHORT CHIP	0		
R645	1-216-864-11	SHORT CHIP	0		
R646	1-218-941-81	METAL CHIP	100	5%	1/16W
R648	1-218-965-11	METAL CHIP	10K	5%	1/16W
R649	1-218-941-81	METAL CHIP	100	5%	1/16W
R651	1-208-715-11	METAL CHIP	22K	0.5%	1/16W
R652	1-216-295-91	SHORT CHIP	0		
R653	1-216-295-91	SHORT CHIP	0		
R734	1-218-965-11	METAL CHIP	10K	5%	1/16W
R735	1-218-953-11	METAL CHIP	1K	5%	1/16W
R736	1-208-923-11	METAL CHIP	33K	0.5%	1/16W
R737	1-218-973-11	METAL CHIP	47K	5%	1/16W
R738	1-208-911-11	METAL CHIP	10K	0.5%	1/16W
R739	1-208-675-11	METAL CHIP	470	0.5%	1/16W
R740	1-218-973-11	METAL CHIP	47K	5%	1/16W
R741	1-208-675-11	METAL CHIP	470	0.5%	1/16W
R742	1-208-911-11	METAL CHIP	10K	0.5%	1/16W
R743	1-208-923-11	METAL CHIP	33K	0.5%	1/16W
R744	1-208-933-11	METAL CHIP	82K	0.5%	1/16W
R745	1-208-905-11	METAL CHIP	5.6K	0.5%	1/16W
R746	1-208-713-11	METAL CHIP	18K	0.5%	1/16W
R747	1-218-990-81	SHORT CHIP	0		
R752	1-216-864-11	SHORT CHIP	0		
R753	1-218-968-11	METAL CHIP	18K	5%	1/16W
R754	1-218-990-81	SHORT CHIP	0		
R755	1-218-990-81	SHORT CHIP	0		
R756	1-218-990-81	SHORT CHIP	0		
R757	1-218-990-81	SHORT CHIP	0		
R758	1-218-990-81	SHORT CHIP	0		
R759	1-218-990-81	SHORT CHIP	0		
R760	1-218-990-81	SHORT CHIP	0		
R761	1-218-990-81	SHORT CHIP	0		
R762	1-218-990-81	SHORT CHIP	0		
R763	1-216-295-91	SHORT CHIP	0		
R764	1-218-990-81	SHORT CHIP	0		
R765	1-218-990-81	SHORT CHIP	0		
R766	1-218-990-81	SHORT CHIP	0		
R767	1-218-990-81	SHORT CHIP	0		
R768	1-218-990-81	SHORT CHIP	0		
R769	1-218-990-81	SHORT CHIP	0		
R801	1-218-990-81	SHORT CHIP	0 (G2BNIP)		
R802	1-218-990-81	SHORT CHIP	0 (G2BNIP)		
R803	1-218-973-11	METAL CHIP	47K	5%	1/16W (G2BNiP)
R804	1-218-990-81	SHORT CHIP	0 (G2BNiP)		
R805	1-218-990-81	SHORT CHIP	0 (G2BNiP)		
R806	1-218-990-81	SHORT CHIP	0 (G2BNiP)		
R807	1-218-990-81	SHORT CHIP	0 (G2BNiP)		
R808	1-218-965-11	METAL CHIP	10K	5%	1/16W (G2BNiP)
R809	1-218-935-11	METAL CHIP	33	5%	1/16W (G2BNiP)
R810	1-218-935-11	METAL CHIP	33	5%	1/16W (G2BNiP)
R811	1-218-935-11	METAL CHIP	33	5%	1/16W (G2BNiP)
R813	1-218-990-81	SHORT CHIP	0		
R815	1-216-836-11	METAL CHIP	18K	5%	1/10W
R816	1-218-990-81	SHORT CHIP	0		
R817	1-218-990-81	SHORT CHIP	0		
R818	1-218-990-81	SHORT CHIP	0		
R819	1-218-990-81	SHORT CHIP	0		
R820	1-218-990-81	SHORT CHIP	0		
R822	1-218-990-81	SHORT CHIP	0		
R823	1-218-941-81	METAL CHIP	100	5%	1/16W
R824	1-218-990-81	SHORT CHIP	0		
R825	1-218-990-81	SHORT CHIP	0		
R826	1-218-990-81	SHORT CHIP	0		
R827	1-218-929-11	METAL CHIP	10	5%	1/16W
R828	1-218-929-11	METAL CHIP	10	5%	1/16W
R830	1-218-929-11	METAL CHIP	10	5%	1/16W
R831	1-218-981-91	METAL CHIP	220K	5%	1/16W
R832	1-218-935-11	METAL CHIP	33	5%	1/16W
R833	1-218-990-81	SHORT CHIP	0		
R834	1-218-935-11	METAL CHIP	33	5%	1/16W
R835	1-218-935-11	METAL CHIP	33	5%	1/16W
R836	1-218-929-11	METAL CHIP	10	5%	1/16W
R837	1-218-929-11	METAL CHIP	10	5%	1/16W
R838	1-216-864-11	SHORT CHIP	0		
R839	1-216-864-11	SHORT CHIP	0		
R840	1-216-864-11	SHORT CHIP	0		
R842	1-218-929-11	METAL CHIP	10	5%	1/16W
R846	1-218-929-11	METAL CHIP	10	5%	1/16W
R847	1-218-990-81	SHORT CHIP	0		
R848	1-218-990-81	SHORT CHIP	0		
R849	1-216-864-11	SHORT CHIP	0		
R850	1-216-864-11	SHORT CHIP	0		
R851	1-216-864-11	SHORT CHIP	0		
R852	1-216-864-11	SHORT CHIP	0		
R853	1-216-864-11	SHORT CHIP	0		
R854	1-216-864-11	SHORT CHIP	0		
R856	1-216-864-11	SHORT CHIP	0		
R857	1-218-929-11	METAL CHIP	10	5%	1/16W
R858	1-218-990-81	SHORT CHIP	0		
R859	1-216-864-11	SHORT CHIP	0		
R860	1-218-990-81	SHORT CHIP	0		
R861	1-218-990-81	SHORT CHIP	0		
R862	1-218-990-81	SHORT CHIP	0		
R863	1-218-990-81	SHORT CHIP	0		
R864	1-218-990-81	SHORT CHIP	0		
R865	1-218-990-81	SHORT CHIP	0		
R866	1-218-990-81	SHORT CHIP	0		
R867	1-218-990-81	SHORT CHIP	0		
R868	1-218-990-81	SHORT CHIP	0		
R869	1-218-990-81	SHORT CHIP	0		
R870	1-218-990-81	SHORT CHIP	0		
R871	1-218-990-81	SHORT CHIP	0		
R873	1-216-864-11	SHORT CHIP	0		
R875	1-216-864-11	SHORT CHIP	0		

MAIN MOTOR NET

Ref. No.	Part No.	Description			Remark
R876	1-218-959-11	METAL CHIP	3.3K	5%	1/16W
R877	1-216-836-11	METAL CHIP	18K	5%	1/10W
R878	1-218-990-81	SHORT CHIP	0		
R879	1-216-836-11	METAL CHIP	18K	5%	1/10W
R880	1-218-969-11	METAL CHIP	22K	5%	1/16W
R881	1-218-989-11	METAL CHIP	1M	5%	1/16W
R882	1-216-836-11	METAL CHIP	18K	5%	1/10W
R883	1-218-941-81	METAL CHIP	100	5%	1/16W
R884	1-216-839-11	METAL CHIP	33K	5%	1/10W
R885	1-218-941-81	METAL CHIP	100	5%	1/16W
R886	1-218-935-11	METAL CHIP	33	5%	1/16W
R887	1-218-935-11	METAL CHIP	33	5%	1/16W
R888	1-218-941-81	METAL CHIP	100	5%	1/16W
R889	1-218-935-11	METAL CHIP	33	5%	1/16W
R890	1-218-935-11	METAL CHIP	33	5%	1/16W
R891	1-218-941-81	METAL CHIP	100	5%	1/16W
R892	1-218-990-81	SHORT CHIP	0		
R893	1-218-935-11	METAL CHIP	33	5%	1/16W
R894	1-218-953-11	METAL CHIP	1K	5%	1/16W
R895	1-216-839-11	METAL CHIP	33K	5%	1/10W
R898	1-218-953-11	METAL CHIP	1K	5%	1/16W
R899	1-218-953-11	METAL CHIP	1K	5%	1/16W
R900	1-216-839-11	METAL CHIP	33K	5%	1/10W
R901	1-216-839-11	METAL CHIP	33K	5%	1/10W
R902	1-216-809-11	METAL CHIP	100	5%	1/10W
R903	1-216-845-11	METAL CHIP	100K	5%	1/10W
R904	1-216-845-11	METAL CHIP	100K	5%	1/10W
R905	1-216-845-11	METAL CHIP	100K	5%	1/10W
R906	1-216-845-11	METAL CHIP	100K	5%	1/10W
R907	1-218-977-11	METAL CHIP	100K	5%	1/16W
R908	1-216-845-11	METAL CHIP	100K	5%	1/10W
R909	1-216-845-11	METAL CHIP	100K	5%	1/10W
R910	1-216-809-11	METAL CHIP	100	5%	1/10W
R911	1-216-833-11	METAL CHIP	10K	5%	1/10W
R912	1-216-833-11	METAL CHIP	10K	5%	1/10W
R917	1-218-990-81	SHORT CHIP	0		
R918	1-218-965-11	METAL CHIP	10K	5%	1/16W
R919	1-218-990-81	SHORT CHIP	0		
R920	1-218-990-81	SHORT CHIP	0		
R921	1-218-990-81	SHORT CHIP	0		
R923	1-218-977-11	METAL CHIP	100K	5%	1/16W
R924	1-218-969-11	METAL CHIP	22K	5%	1/16W
R925	1-218-969-11	METAL CHIP	22K	5%	1/16W
R929	1-218-990-81	SHORT CHIP	0		
R930	1-218-990-81	SHORT CHIP	0 (G2NiP)		
R931	1-218-990-81	SHORT CHIP	0 (G2NiP)		
R932	1-218-990-81	SHORT CHIP	0 (G2NiP)		
R933	1-216-864-11	SHORT CHIP	0		
R1405	1-218-985-11	METAL CHIP	470K	5%	1/16W
R1406	1-218-990-81	SHORT CHIP	0		
R1407	1-208-711-11	METAL CHIP	15K	0.5%	1/16W
R1408	1-208-885-11	METAL CHIP	820	0.5%	1/16W
R1409	1-218-941-11	METAL CHIP	100	5%	1/16W
R1412	1-218-953-11	METAL CHIP	1K	5%	1/16W
R1413	1-216-864-11	SHORT CHIP	0		
R1414	1-218-977-11	METAL CHIP	100K	5%	1/16W
R1415	1-218-945-11	METAL CHIP	220	5%	1/16W
R1416	1-218-957-11	METAL CHIP	2.2K	5%	1/16W
R1417	1-218-965-11	METAL CHIP	10K	5%	1/16W
R1418	1-218-941-81	METAL CHIP	100	5%	1/16W

Ref. No.	Part No.	Description			Remark
R1421	1-218-990-81	SHORT CHIP	0		
R1428	1-208-709-11	METAL CHIP	12K	0.5%	1/16W
R1429	1-208-709-11	METAL CHIP	12K	0.5%	1/16W
R1433	1-218-990-81	SHORT CHIP	0		
R1434	1-218-990-81	SHORT CHIP	0		
R2405	1-218-985-11	METAL CHIP	470K	5%	1/16W
R2406	1-218-990-81	SHORT CHIP	0		
R2407	1-208-711-11	METAL CHIP	15K	0.5%	1/16W
R2408	1-208-885-11	METAL CHIP	820	0.5%	1/16W
R2409	1-218-941-11	METAL CHIP	100	5%	1/16W
R2412	1-218-953-11	METAL CHIP	1K	5%	1/16W
R2413	1-216-864-11	SHORT CHIP	0		
R2414	1-218-977-11	METAL CHIP	100K	5%	1/16W
R2415	1-218-945-11	METAL CHIP	220	5%	1/16W
R2416	1-218-957-11	METAL CHIP	2.2K	5%	1/16W
R2417	1-218-965-11	METAL CHIP	10K	5%	1/16W
R2418	1-218-941-81	METAL CHIP	100	5%	1/16W
R2419	1-218-959-11	METAL CHIP	3.3K	5%	1/16W
R2421	1-218-990-81	SHORT CHIP	0		
R2423	1-218-965-11	METAL CHIP	10K	5%	1/16W
R2424	1-218-977-11	METAL CHIP	100K	5%	1/16W
R2428	1-208-709-11	METAL CHIP	12K	0.5%	1/16W
R2429	1-208-709-11	METAL CHIP	12K	0.5%	1/16W
R2433	1-218-990-81	SHORT CHIP	0		
R2434	1-218-990-81	SHORT CHIP	0		
R2435	1-218-969-11	METAL CHIP	22K	5%	1/16W
R2436	1-218-969-11	METAL CHIP	22K	5%	1/16W
R2437	1-218-977-11	METAL CHIP	100K	5%	1/16W
R2438	1-218-935-11	METAL CHIP	33	5%	1/16W
R2439	1-218-935-11	METAL CHIP	33	5%	1/16W
R2440	1-218-935-11	METAL CHIP	33	5%	1/16W
		< VIBRATOR >			
X401	1-814-273-11	QUARTZ CRYSTAL UNIT (32.768 kHz)			
X402	1-813-005-21	VIBRATOR, CERAMIC (5 MHz)			
X601	1-814-450-11	QUARTZ CRYSTAL UNITS (16.9344 MHz)			
X801	1-814-130-11	QUARTZ CRYSTAL UNIT (24.576 MHz)			

****

MOTOR BOARD
****

When the MOTOR board is damaged, exchange the LOADING (BK) ASSY.

****

A-1847-087-A NET BOARD, COMPLETE
****

< CAPACITOR >

C5002	1-165-908-11	CERAMIC CHIP	1uF	10%	10V
C5003	1-125-777-11	CERAMIC CHIP	0.1uF	10%	10V
C5004	1-107-826-11	CERAMIC CHIP	0.1uF	10%	16V
C5005	1-107-826-11	CERAMIC CHIP	0.1uF	10%	16V
C5006	1-164-874-11	CERAMIC CHIP	100PF	5%	50V
C5007	1-165-908-11	CERAMIC CHIP	1uF	10%	10V
C5008	1-165-908-11	CERAMIC CHIP	1uF	10%	10V
C5009	1-125-777-11	CERAMIC CHIP	0.1uF	10%	10V
C5010	1-125-777-11	CERAMIC CHIP	0.1uF	10%	10V
C5011	1-164-854-11	CERAMIC CHIP	15PF	5%	50V
C5012	1-164-854-11	CERAMIC CHIP	15PF	5%	50V
C5013	1-164-870-11	CERAMIC CHIP	68PF	5%	50V
C5014	1-164-870-11	CERAMIC CHIP	68PF	5%	50V

NET

Ref. No.	Part No.	Description			Remark
C5016	1-117-681-11	ELECT CHIP	100uF	20%	16V
C5017	1-107-826-11	CERAMIC CHIP	0.1uF	10%	16V
C5018	1-164-854-11	CERAMIC CHIP	15PF	5%	50V
C5019	1-164-870-11	CERAMIC CHIP	68PF	5%	50V
C5020	1-125-777-11	CERAMIC CHIP	0.1uF	10%	10V
C5021	1-107-826-11	CERAMIC CHIP	0.1uF	10%	16V
C5022	1-165-989-11	CERAMIC CHIP	10uF	10%	6.3V
C5023	1-117-681-11	ELECT CHIP	100uF	20%	16V
C5024	1-164-874-11	CERAMIC CHIP	100PF	5%	50V
C5025	1-125-777-11	CERAMIC CHIP	0.1uF	10%	10V
C5026	1-165-989-11	CERAMIC CHIP	10uF	10%	6.3V
C5027	1-117-681-11	ELECT CHIP	100uF	20%	16V
C5028	1-162-966-11	CERAMIC CHIP	0.0022uF	10%	50V
C5029	1-162-966-11	CERAMIC CHIP	0.0022uF	10%	50V
C5030	1-162-967-11	CERAMIC CHIP	0.0033uF	10%	50V
C5031	1-107-826-11	CERAMIC CHIP	0.1uF	10%	16V
C5033	1-115-416-11	CERAMIC CHIP	0.001uF	5%	25V
C5035	1-164-227-11	CERAMIC CHIP	0.022uF	10%	25V
C5036	1-119-923-11	CERAMIC CHIP	0.047uF	10%	10V
C5038	1-119-923-11	CERAMIC CHIP	0.047uF	10%	10V
C5039	1-119-923-11	CERAMIC CHIP	0.047uF	10%	10V
C5040	1-100-703-91	CERAMIC CHIP	10uF	10%	25V
		< CONNECTOR >			
CN5002	1-784-365-51	CONNECTOR, FFC/FPC 5P			
CN5003	(Not supplied)	CONNECTOR, BOARD TO BOARD 120P			
CN5004	1-770-470-21	PIN, CONNECTOR (PC BOARD) 6P			
CN5005	1-778-692-51	CONNECTOR, FFC/FPC 21P			
		< DIODE >			
D5002	6-502-961-01	DIODE DA2J10100L			
D5003	6-502-961-01	DIODE DA2J10100L			
		< EARTH TERMINAL >			
ET5001	1-780-482-11	EARTH TERMINAL			
ET5002	1-780-482-11	EARTH TERMINAL			
ET5003	1-780-482-11	EARTH TERMINAL			
ET5004	1-780-482-11	EARTH TERMINAL			
		< FERRITE BEAD >			
FB5004	1-400-794-21	EMI FERRITE (SMD) (1608)			
		< IC >			
IC5001	6-712-613-01	IC SI-3010KM-TLS			
IC5002	6-707-800-01	IC SRC4182			
IC5003	6-716-554-11	IC BD9329AEFJ-E2			
		< COIL >			
L5001	1-424-918-21	COIL, CHOKE (SMD) 10uH			
		< RESISTOR >			
R5002	1-216-864-11	SHORT CHIP	0		
R5003	1-216-296-11	SHORT CHIP	0		
R5004	1-218-941-81	METAL CHIP	100	5%	1/16W
R5005	1-216-864-11	SHORT CHIP	0		
R5006	1-216-296-11	SHORT CHIP	0		
R5007	1-216-864-11	SHORT CHIP	0		
R5008	1-216-295-91	SHORT CHIP	0		
R5009	1-216-295-91	SHORT CHIP	0		
R5010	1-216-864-11	SHORT CHIP	0		

Note: CN5003 on the NET board cannot exchange with single. When this part is damaged, exchange the complete mounted board.

Ref. No.	Part No.	Description			Remark
R5011	1-216-864-11	SHORT CHIP	0		
R5012	1-216-864-11	SHORT CHIP	0		
R5013	1-218-990-81	SHORT CHIP	0		
R5014	1-218-990-81	SHORT CHIP	0		
R5015	1-216-864-11	SHORT CHIP	0		
R5016	1-216-864-11	SHORT CHIP	0		
R5017	1-216-295-91	SHORT CHIP	0		
R5018	1-218-965-11	METAL CHIP	10K	5%	1/16W
R5019	1-218-965-11	METAL CHIP	10K	5%	1/16W
R5020	1-218-965-11	METAL CHIP	10K	5%	1/16W
R5021	1-218-965-11	METAL CHIP	10K	5%	1/16W
R5022	1-218-965-11	METAL CHIP	10K	5%	1/16W
R5023	1-218-965-11	METAL CHIP	10K	5%	1/16W
R5024	1-216-864-11	SHORT CHIP	0		
R5028	1-218-937-11	METAL CHIP	47	5%	1/16W
R5030	1-218-937-11	METAL CHIP	47	5%	1/16W
R5031	1-218-937-11	METAL CHIP	47	5%	1/16W
R5032	1-218-937-11	METAL CHIP	47	5%	1/16W
R5034	1-218-990-81	SHORT CHIP	0		
R5035	1-218-937-11	METAL CHIP	47	5%	1/16W
R5036	1-218-937-11	METAL CHIP	47	5%	1/16W
R5037	1-218-937-11	METAL CHIP	47	5%	1/16W
R5038	1-218-990-81	SHORT CHIP	0		
R5039	1-218-965-11	METAL CHIP	10K	5%	1/16W
R5040	1-218-965-11	METAL CHIP	10K	5%	1/16W
R5041	1-218-961-11	METAL CHIP	4.7K	5%	1/16W
R5042	1-218-961-11	METAL CHIP	4.7K	5%	1/16W
R5043	1-218-965-11	METAL CHIP	10K	5%	1/16W
R5044	1-218-990-81	SHORT CHIP	0		
R5045	1-218-937-11	METAL CHIP	47	5%	1/16W
R5046	1-218-937-11	METAL CHIP	47	5%	1/16W
R5047	1-218-937-11	METAL CHIP	47	5%	1/16W
R5048	1-218-937-11	METAL CHIP	47	5%	1/16W
R5049	1-218-937-11	METAL CHIP	47	5%	1/16W
R5050	1-218-937-11	METAL CHIP	47	5%	1/16W
R5051	1-218-847-11	METAL CHIP	1K	0.5%	1/10W
R5052	1-218-847-11	METAL CHIP	1K	0.5%	1/10W
R5053	1-218-871-11	METAL CHIP	10K	0.5%	1/10W
R5054	1-218-871-11	METAL CHIP	10K	0.5%	1/10W
R5058	1-218-973-11	METAL CHIP	47K	5%	1/16W
R5062	1-218-937-11	METAL CHIP	47	5%	1/16W
R5063	1-218-990-81	SHORT CHIP	0		
R5064	1-218-990-81	SHORT CHIP	0		
R5065	1-218-973-11	METAL CHIP	47K	5%	1/16W
R5066	1-218-973-11	METAL CHIP	47K	5%	1/16W
R5067	1-218-973-11	METAL CHIP	47K	5%	1/16W
R5069	1-218-973-11	METAL CHIP	47K	5%	1/16W
R5070	1-218-973-11	METAL CHIP	47K	5%	1/16W
R5071	1-218-973-11	METAL CHIP	47K	5%	1/16W
R5072	1-216-296-11	SHORT CHIP	0		
R5073	1-216-821-11	METAL CHIP	1K	5%	1/10W
R5074	1-216-845-11	METAL CHIP	100K	5%	1/10W
R5075	1-216-864-11	SHORT CHIP	0		
R5076	1-218-973-11	METAL CHIP	47K	5%	1/16W
R5077	1-218-973-11	METAL CHIP	47K	5%	1/16W
R5079	1-218-973-11	METAL CHIP	47K	5%	1/16W
R5080	1-216-864-11	SHORT CHIP	0		
R5083	1-218-973-11	METAL CHIP	47K	5%	1/16W
R5085	1-218-883-11	METAL CHIP	33K	0.5%	1/10W
R5086	1-218-873-11	METAL CHIP	12K	0.5%	1/10W

NET SUB-PT TUNER

Ref. No.	Part No.	Description			Remark
R5087	1-218-831-11	METAL CHIP	220	0.5%	1/10W
R5088	1-218-990-81	SHORT CHIP	0		
R5089	1-218-990-81	SHORT CHIP	0		
R5090	1-218-990-81	SHORT CHIP	0		
R5091	1-218-990-81	SHORT CHIP	0		
R5092	1-218-990-81	SHORT CHIP	0		
R5093	1-216-801-11	METAL CHIP	22	5%	1/10W
R5094	1-216-801-11	METAL CHIP	22	5%	1/10W
R5095	1-216-832-11	METAL CHIP	8.2K	5%	1/10W
R5096	1-216-864-11	SHORT CHIP	0		
R5098	1-216-864-11	SHORT CHIP	0		
R5099	1-216-864-11	SHORT CHIP	0		
R5101	1-216-864-11	SHORT CHIP	0		
R5102	1-216-864-11	SHORT CHIP	0		
R5103	1-216-864-11	SHORT CHIP	0		
R5104	1-216-864-11	SHORT CHIP	0		
R5105	1-216-864-11	SHORT CHIP	0		
R5106	1-216-864-11	SHORT CHIP	0		
R5107	1-216-864-11	SHORT CHIP	0		
R5108	1-216-864-11	SHORT CHIP	0		
R5109	1-216-864-11	SHORT CHIP	0		
R5110	1-216-864-11	SHORT CHIP	0		
R5111	1-216-864-11	SHORT CHIP	0		
R5112	1-216-864-11	SHORT CHIP	0		
R5113	1-216-864-11	SHORT CHIP	0		
R5114	1-216-864-11	SHORT CHIP	0		
R5115	1-216-864-11	SHORT CHIP	0		
R5116	1-216-864-11	SHORT CHIP	0		
R5118	1-216-864-11	SHORT CHIP	0		
R5119	1-216-864-11	SHORT CHIP	0		
R5120	1-216-864-11	SHORT CHIP	0		
R5121	1-218-285-11	METAL CHIP	75	5%	1/10W
R5122	1-218-285-11	METAL CHIP	75	5%	1/10W
R5123	1-216-797-11	METAL CHIP	10	5%	1/10W
R5126	1-216-864-11	SHORT CHIP	0		
R5127	1-216-864-11	SHORT CHIP	0		
R5128	1-218-929-11	METAL CHIP	10	5%	1/16W
R5129	1-218-929-11	METAL CHIP	10	5%	1/16W
R5131	1-218-929-11	METAL CHIP	10	5%	1/16W
R5132	1-218-965-11	METAL CHIP	10K	5%	1/16W
		< TRANSFORMER >			
T001	1-445-954-11	PULSE TRANSFORMER			

****

SUB-PT BOARD
****

Ref. No.	Part No.	Description			Remark
		< CAPACITOR >			
C4401	1-126-963-11	ELECT	4.7uF	20%	50V
C4402	1-126-942-61	ELECT	1000uF	20%	25V
C4404	1-114-323-11	CERAMIC CHIP	0.01uF	10%	50V
C4405	1-114-323-11	CERAMIC CHIP	0.01uF	10%	50V
C4406	1-162-964-11	CERAMIC CHIP	0.001uF	10%	50V
⚠ C4407	1-113-924-51	CERAMIC	0.0047uF	20%	250V
C4408	1-100-597-91	CERAMIC CHIP	0.1uF	10%	25V
		< CONNECTOR >			
⚠ CN4404	1-565-792-11	PIN, CONNECTOR (3.96 mm PITCH) 2P			
⚠ CN4405	1-793-660-11	PIN, CONNECTOR (PC BOARD) 3P			
		< DIODE >			
D4401	6-500-335-01	DIODE MC2838-T112-1			
D4402	6-500-335-01	DIODE MC2838-T112-1			
D4404	6-500-334-01	DIODE MC2836-T112-1			
D4406	6-502-961-01	DIODE DA2J10100L			
		< FUSE >			
⚠ F4401	1-532-504-33	FUSE (T 4 AL/250 V)			
		< FUSE HOLDER >			
⚠ FH4401	1-533-217-41	FUSE HOLDER			
⚠ FH4402	1-533-217-41	FUSE HOLDER			
		< TRANSISTOR >			
Q4401	8-729-620-07	TRANSISTOR	2SC3052EF-T1-LEF		
		< RESISTOR >			
R4402	1-216-864-11	SHORT CHIP	0		
R4403	1-216-843-11	METAL CHIP	68K	5%	1/10W
R4404	1-216-829-11	METAL CHIP	4.7K	5%	1/10W
R4405	1-216-829-11	METAL CHIP	4.7K	5%	1/10W
R4406	1-216-864-11	SHORT CHIP	0		
R4407	1-216-801-11	METAL CHIP	22	5%	1/10W
		< RELAY >			
⚠ RY4401	1-755-276-22	RELAY, POWER			
		< TRANSFORMER >			
⚠ T4401	1-443-912-11	TRANSFORMER, POWER (G2BNiP: UK/G2NiP)			
⚠ T4401	1-445-105-11	TRANSFORMER, POWER (G2BNiP: AUS)			
⚠ T4402	1-445-048-21	TRANSFORMER, LINE FILTER			

****

A-1820-895-A TUNER BOARD, COMPLETE
****

Ref. No.	Part No.	Description			Remark
		< CAPACITOR >			
C4501	1-124-584-00	ELECT	100uF	20%	6.3V
C4502	1-107-826-11	CERAMIC CHIP	0.1uF	10%	16V
C4505	1-165-884-11	CERAMIC CHIP	2.2uF	10%	6.3V
C4506	1-165-176-11	CERAMIC CHIP	0.047uF	10%	16V
C4507	1-164-218-11	CERAMIC CHIP	180PF	5%	50V
C4508	1-164-218-11	CERAMIC CHIP	180PF	5%	50V
C4511	1-165-908-11	CERAMIC CHIP	1uF	10%	10V
C4512	1-162-970-11	CERAMIC CHIP	0.01uF	10%	25V
		< CONNECTOR >			
CN4501	1-779-546-11	CONNECTOR, FFC (LIF (NON-ZIF)) 9P			
CN4503	1-842-376-11	CONNECTOR, FM ANTENNA (ANTENNA FM 75Ω COAXIAL)			
		< DIODE >			
D4501	6-500-848-01	DIODE MC2840-T112-1			
D4502	6-500-848-01	DIODE MC2840-T112-1			
D4503	6-500-848-01	DIODE MC2840-T112-1			
		< BAND PASS FILTER >			
FL4501	1-236-711-21	FILTER, BAND PASS			

Ref. No.	Part No.	Description			Remark
		< IC >			
IC4501	6-717-268-01	IC RZ5B800-0002E2			
		< JUMPER RESISTOR >			
JR502	1-216-864-11	SHORT CHIP	0		
		< COIL >			
L4501	1-457-998-11	COIL, AM ANTENNA			
L4502	1-481-813-21	INDUCTOR	1uH		
L4503	1-469-918-21	INDUCTOR	33nH		
L4504	1-469-525-91	INDUCTOR	10uH		
		< RESISTOR >			
R4501	1-216-864-11	SHORT CHIP	0		
R4502	1-216-864-11	SHORT CHIP	0		
R4503	1-218-675-11	METAL CHIP	200	0.5%	1/10W
R4504	1-216-864-11	SHORT CHIP	0		
R4506	1-216-809-11	METAL CHIP	100	5%	1/10W
R4507	1-216-864-11	SHORT CHIP	0		
R4508	1-216-797-11	METAL CHIP	10	5%	1/10W
R4509	1-216-864-11	SHORT CHIP	0		
R4510	1-216-833-11	METAL CHIP	10K	5%	1/10W
R4511	1-218-675-11	METAL CHIP	200	0.5%	1/10W
R4513	1-218-895-11	METAL CHIP	100K	0.5%	1/10W
R4515	1-216-864-11	SHORT CHIP	0		
R4516	1-216-864-11	SHORT CHIP	0		
R4517	1-218-675-11	METAL CHIP	200	0.5%	1/10W
R4519	1-216-864-11	SHORT CHIP	0		
		< TERMINAL >			
TB001	1-780-902-11	2P PUSH TERMINAL (ANTENNA AM)			
		< VIBRATOR >			
X4501	1-767-317-11	VIBRATOR, CRYSTAL (32.768 kHz)			

****

	A-1820-896-A	USB BOARD, COMPLETE **********			
		< CAPACITOR >			
C4601	1-107-826-11	CERAMIC CHIP	0.1uF	10%	16V
C4602	1-107-826-11	CERAMIC CHIP	0.1uF	10%	16V
		< CONNECTOR >			
CN4602	1-822-423-11	CONNECTOR, USB (A) (ψ)			
		< DIODE >			
D4605	6-500-848-01	DIODE MC2840-T112-1			
		< JUMPER RESISTOR >			
R4601	1-216-864-11	SHORT CHIP	0		
R4602	1-216-864-11	SHORT CHIP	0		

****

		MISCELLANEOUS **********
59	1-500-082-11	CLAMP, SLEEVE FERRITE
61	1-839-673-21	CABLE, FLEXIBLE FLAT (19 CORE)
62	1-839-489-21	CABLE, FLEXIBLE FLAT (7 CORE)
101	1-481-530-21	FILTER, CLAMP (FERRITE CORE)
104	1-839-670-21	CABLE, FLEXIBLE FLAT (8 CORE) (G2BNiP)
106	1-839-671-21	CABLE, FLEXIBLE FLAT (9 CORE)
107	1-457-413-11	CORE, FERRITE
153	1-839-672-21	CABLE, FLEXIBLE FLAT (15 CORE)
154	1-457-413-11	CORE, FERRITE
155	1-500-082-11	CLAMP, SLEEVE FERRITE
156	1-481-530-21	FILTER, CLAMP (FERRITE CORE)
161	1-839-674-21	CABLE, FLEXIBLE FLAT (21 CORE)
205	1-481-530-21	FILTER, CLAMP (FERRITE CORE)
207	1-832-534-21	CABLE, FLEXIBLE FLAT (5 CORE)
208	1-832-615-21	CABLE, FLEXIBLE FLAT (21 CORE)
251	A-1242-967-B	LOADING (BK) ASSY (Including MOTOR board)
⚠ 256	A-4735-357-A	BASE ASSY, OP (KSM-213D) (Including sled motor, spindle motor)
257	1-834-268-21	WIRE (FLAT TYPE) (16 CORE)
⚠ AC1	1-697-045-11	AC INLET (2P)
ANT1	1-754-804-11	ANTENNA, 2.4 GHZ
CN01	1-820-441-11	CONNECTOR, COAXIAL (F TYPE) (G2BNiP)
DAB1	1-489-807-11	MODULE (DAB TUNER) (G2BNiP)
MOD1	A-1861-411-A	MODULE (SERVICE) (WIRELESS LAN MODULE)
⚠ T901	1-697-042-11	TRANSFORMER, POWER (AUS)
⚠ T901	1-697-044-11	TRANSFORMER, POWER (AEP, UK)
S201	1-771-853-11	SWITCH, DETECTION (LIMIT)

REVISION HISTORY

Checking the version allows you to jump to the revised page.
Also, clicking the version at the top of the revised page allows you to jump to the next revised page.

Ver.	Date	Description of Revision
1.0	2011.10	New
1.1	2012.03	Addition of AEP model (HCD-G2BNiP) Change of HP, JOG1, JOG2, SUB-PT, TUNER and USB boards (Suffix-12) Change of Part for Ref. No. IC601 on the MAIN board Change of Part for Ref. No. S4301 on the JOG1 board Change of Part for Ref. No. S4321 and S4322 on the JOG2 board (SMR-11067)